	CHASSIS	ENGINE	MODEL	VERSION	3 doors	5 doors	GEARBOX	
							5 speed	6 speed
1108 EEC STAGE 2 (CF2)	ZFA 176.000	176 B2.000	176 AQ 53F	S 55	●		●	
			176 BQ 53F (*)		●		●	
			176 AQ 55F			●	●	
			176 BQ 55F (*)			●	●	
			176 AQ 53P	SX 55	●		●	
			176 BQ 53P (*)		●		●	
			176 AQ 55P			●	●	
			176 BQ 55P (*)			●	●	
			176 AQ 63E	6 Speed	●			●
1698 D Em. 08		176 B3.000	176 AI 53F	S D	●		●	
			176 AI 55F			●	●	
1698 TD EEC STAGE 2 (CF2)		176 A3.000	176 CG 53F	S TD	●		●	
			176 CG 53P	SX TD	●		●	
			176 CG 55P			●	●	

(*) For French market

WEIGHTS (values expressed in kg)

ENGINE		1108		1698 D	1698 TD
GEARBOX		1 3 5 / 2 4 R	1 3 5 / 2 4 6 R	1 3 5 / 2 4 R	
	3 doors	850/860 (*)	865	995	1010/1035 (*)
	5 doors	865/875 (*)	–	1010	1050
+450 = 100	3 doors	1300/1310 (*)	1315	1445	1460/1485 (*)
	5 doors	1315/1325 (*)	–	1460	1500
Maximum permitted loads on axles ■	3 doors	700	700	850	850
	5 doors	700	–	850	850
	3 doors	700	700	700	700
	5 doors	700	–	700	700
Maximum load permitted on roof		75	75	75	75
Load on tow hook ball (trailer with braking system)	Minimum	–	–	–	–
	Maximum	70	70	70	70
	Without braking system	400	400	400	400
	With braking system	900	900	1100	1100

■ Loads that should never be exceeded

NOTE FOR VERSIONS WITH ACCESSORIES: If there is special equipment (non-standard air conditioner, sunroof or tow hook), the unladen weight increases and so the payload may decrease in order to observe the permitted maximum loads.

(*) The first value refers to the car with no optional extras, and the second to the car complete with optional extras.

ENGINE	1108		1698 D	1698 TD
GEARBOX	1 3 5 / 2 4 R	1 3 5 / 2 4 6 R	1 3 5 / 2 4 R	1 3 5 / 2 4 R
Speed km/h (average load) — 1	40 (43●)	35	32	33
2	72 (78●)	57	58	58
3	105 (125●)	83	93	90
4	138 (150●)	109	128	128
5	150 (145●)	136	150	163
6	–	150	33	33
Fuel consumption ECE standard (litres/100 km) — Urban cycle (A)	7.9 (7.2●)	7	7	6.9
Constant speed 90 km/h (B)	4,7 (4,3●)	5	4,6	4.5
Constant speed 120 km/h (C)	6,5 (6,1●)	6,9	6,5	6.4
Mean fuel consumption (CCMC proposal) $\frac{A+B+C}{3}$	6,4 (5,9●)	6,3	6	5.9

The fuel consumption values given on the table have been defined during official tests and in accordance with procedures established by EEC regulations. In particular, consumption in simulated urban cycle is measured on a test bench, while consumption at constant speeds of 90 and 120 km/h is measured both directly on a flat and dry road and during equivalent bench tests. These values may provide useful information for comparison between different vehicles. Traffic situations, driving styles, weather conditions and the vehicle's general condition may in practice lead to fuel consumption values which are different from those established by means of the above-mentioned legislative procedures.

(●) For French market

Capacities	Part to be filled		Amount dm³(l)	Amount (kg)
Petrol ⩾ O.N. 95 (●) Diesel		1108 1698 D 1698 TD	47	–
50% + (▲)	Total capacity cooling system	1108	4.6	–
		1698 D 1698 TD	7.2	–
Petrol engines SELENIA (SAE 10 W/40)	Total capacity	1108	3.58	3.25
		1698 D 1698 TD	5.5	4.9
Diesel engines SELENIA Turbo Diesel (SAE 15 W/40)	Partial capacity (periodic changes)	1108	3.47 3.08*	3.15 2.08*
		1698 D	4.95 4.25*	4.4 3.75*
		1698 TD	4.84 4.4*	4.4 4*
a = TUTELA ZC 80S b = TUTELA GI/A		1108-1698 D, a	2.37	2.15
		1398 TD, a	1.98	1.8
		b	–	–
a = TUTELA GI/A	a	a	–	0.65
b = K 854	b	b	–	0.126
c = TUTELA MRM2	c	c	–	0.08
TUTELA TOP 4 (270°C)	Total capacity	without ABS	0.4	–
		with ABS	0.5	–
+ AREXONS	~ - 10°C: 3%; ~ - 20°C: 50%; 100%		2.5	–

(▲) Distilled water
(●) Only unleaded fuel should be used
* Engine sump only

Product name	Description International designation	Usage
SELENIA SAE 10 W/40	Semisynthetic multigrade engine oil. Better than API SH, CCMC-G5 and UNI 20153 specifications	Temperature - 25°C - 40°C
VS MAX SAE 15 W/40	Multigrade mineral oil. Better than API SG, CCMC-G4 and UNI 20153 specifications	Temperature - 15°C - 40°C
SELENIA Turbo Diesel SAE 15 W/40	Multigrade, semisynthetic engine oil. Better than API CD, CCMC-PD2, UNI 20153 specifications	Temperature - 15°C - 40°C
VS MAX Diesel SAE 15 W/40	Multigrade and mineral-based oil. Better than API CD, CCMC and UNI 20153 specifications	Temperature - 15°C - 40°C
TUTELA ZC 80S	SAE 80W EP oil. Meets MIL-L-2105 and API GL4 specifications	Manual gearboxes and differentials
TUTELA ZC 90	Non EP SAE 80 W/90 oil for manual gearboxes, containing antiwear additives.	Gearboxes and non hypoid differentials
TUTELA W 90/M DA	Special SAE 80 W/90 EP oil for ordinary and limited-slip differentials. Meets MIL–L–2105 D and API GL5 specifications	Hypoid differentials Limited-slip diffs. Steering boxes
TUTELA GI/A	"DEXRON II" automatic transmission fluid	Automatic transmissions Power assisted steering
TUTELA CVT Universal	Fluid for continuous variation automatic transmissions	Continously variable automatic transmissions
TUTELA JOTA 1	Lithium soap based grease, NLGI consistency = 1	Greasing the vehicle except for components particularly exposed to water requiring special greases
TUTELA MRM2	Water-repellent, lithium soap based grease containing molybdenum disulphide, consistency NLGI = 2	Constant velocity joints
TUTELA MR3	Lithium soap based grease, NLGI consistency = 3	Wheel bearings, steering rod, various components
TUTELA PLUS 3 (240 °C)	Synthetic fluid, F.M.V.S.S. n° 116 DOT 3 ISO 4925, CUNA NC 956-01	Hydraulic brake and clutch systems
TUTELA TOP 4 (270 °C)	Synthetic fluid, F.M.V.S.S. n° 116 DOT 4 ISO 4925, CUNA NC 956-01	Hydraulic brake and clutch systems
K 854	Lithium soap based grease, NLGI consistency = 000, containing molybdenum disulphide	Rack and pinion steering systems
SP 349	Special grease compatible with brake fluid	Load proportioning valve Load proportioning valve rod bush
Arexons DP1	Mixture of alcohols, water and surfactants CUNA NC 956-11	To be used undiluted or diluted in windscreen wash/wipe systems
Paraflu[11]	Inhibited monoethylene glycol based anti-freeze for cooling systems, CUNA NC 596 - 16	Cooling systems Concentration 50% down to - 35°C
Diesel Mix Arexons	Diesel additive with protective action for diesel engines	To be mixed with diesel (25 cc for 10 litres)

CHARACTERISTICS		1108
	Cycle	OTTO, 4-STROKE
	Timing gear	single overhead cam
	Fuel system type	WEBER-MARELLI I.A.W. integrated fuel injection-ignition
Number of cylinders		4
Cylinder bore (bore)	mm	70
Stroke	mm	72
Capacity	cm^3	1108
Compression ratio		9.6±0.2
Maximum power	kW (EEC) (bhp) (EEC)	40 (54)
	rpm	5500
Maximum torque	daNm (EEC) (kgm) (EEC)	8.6 (8.8)
	rpm	3250

TYPICAL ENGINE CURVES MEASURED BY EEC METHOD

The curves illustrated are those obtained with engines overhauled and run in (50 hours of operation) without fan, with exhaust silencers and air cleaner and at sea level.

Bench test cycles for overhauled engines

When bench testing overhauled engines, it is not advisable to bring the engines up to maximum rpm, but instead adhere to the data specified in the table; finish running in the engines on the car.

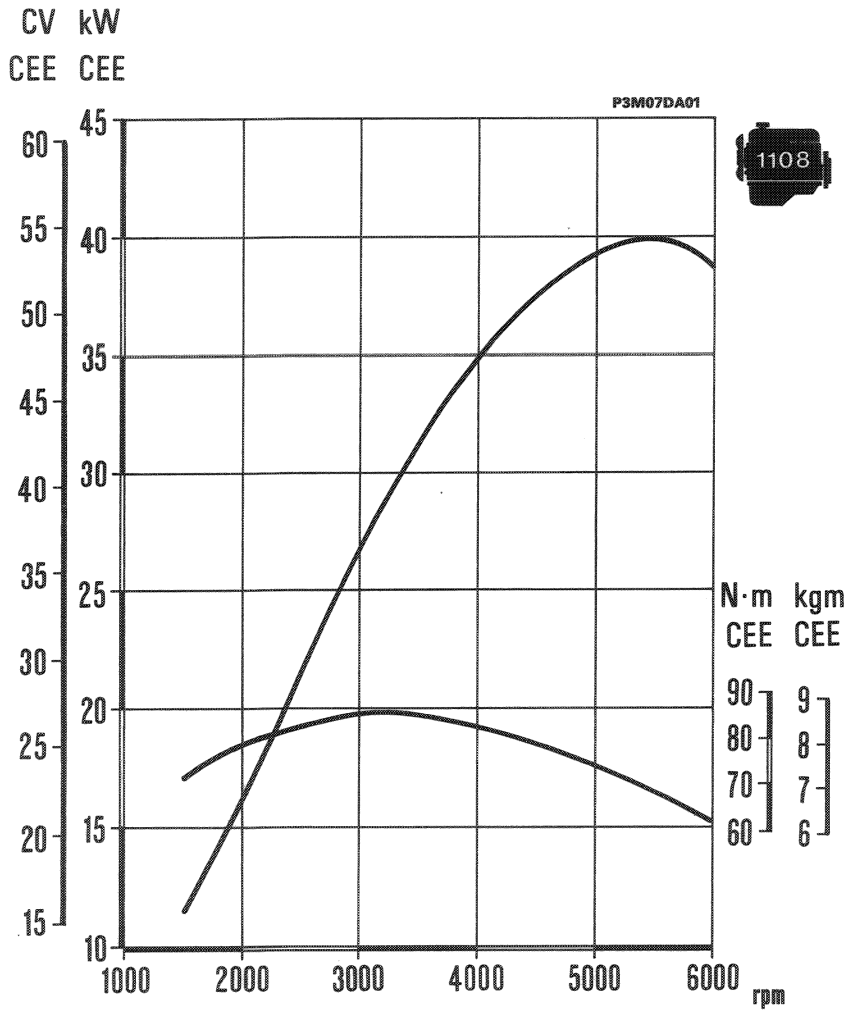

Test speed (rpm)	Time in minutes	Brake load
800-1000	10′	no load
1500	10′	no load
2000	10′	no load

00.10

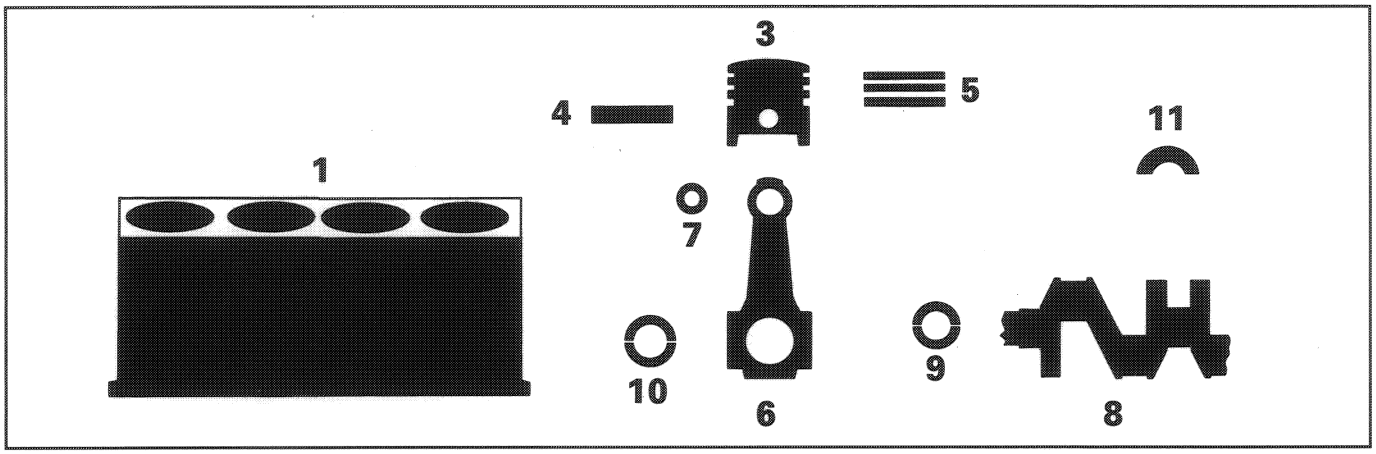

DESCRIPTION		Values in mm
1 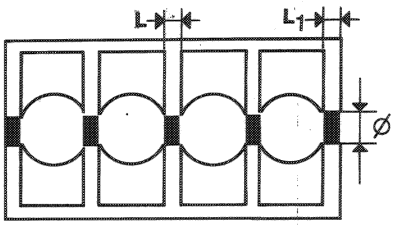	L	19.140 - 19.200
	L1	–
Main bearings	Ø 1	47.705-47.709
	Ø 2	47.709-47.713
	Ø 3	47.713-47.717
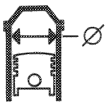 Cylinder bore	Ø (0.010)	70.000-70.030
3 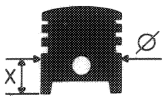	X	8
	Ø A	69.960-69.970
	Ø B	69.970-69.980
	Ø C	69.980-69.990
Piston	Ø FIAT >	0.4

DESCRIPTION			1108 Values in mm
3	Weight difference between pistons		±5 g
3-1	Piston - Cylinder bore		0.030 - 0.050
3	Gudgeon pin housing	⌀	17.982 - 17.986
3	Piston ring grooves	1	1.230 - 1.250
		2	1.210 - 1.230
		3	2.510 - 2.530
4	Gudgeon pin	⌀	17.970 - 17.974
4-3	Gudgeon pin - Housing		0.008 - 0.016
5	Piston rings	L 1	1.175 - 1.190
		L 2	1.175 - 1.190
		L 3	2.475 - 2.490
		⌀ FIAT >	0.4
5-1	Piston ring end gap in cylinder bore	1	0.25- 0.45
		2	0.25 - 0.45
		3	0.20 - 0.45
5-3	Piston rings Piston ring grooves	1	0.040 - 0.075
		2	0.020 - 0.055
		3	0.020 - 0.055

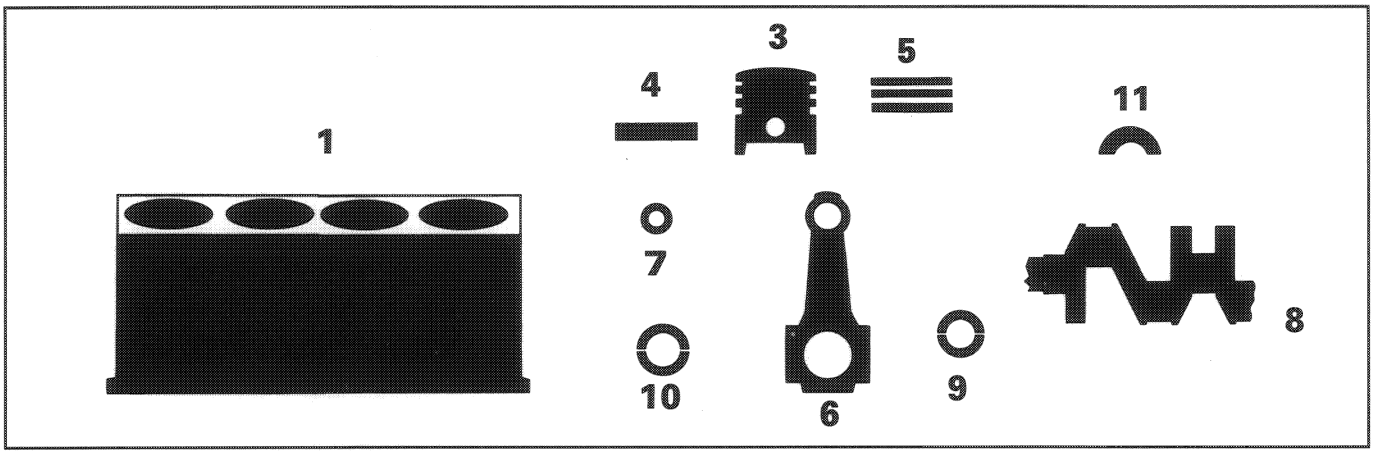

DESCRIPTION			Values in mm
6	Small end bush or journal seat	Ø1	17.939 - 17.956
	Big end bearing seat	Ø2	41.128 - 41.138
4-6	Gudgeon pin Con rod small end		0.014 - 0.035
8	Main journals Ø1	1	43.994-44.000
		2	43.988-43.994
		3	43.982-43.988
	Crank-pins Ø2	A	38.002-38.008
		B	37.996-38.002
		C	37.990-37.996
		L	-
		L1	23.975 - 24.025
9	Main bearings L	1	1.836 - 1.840
		2	1.840 - 1.844
		3	1.844 - 1.848
	Ø FIAT <		0.254 - 0.508

DESCRIPTION			1108 Values in mm
9–8	Main bearings–Journals	1	0.025 - 0.043
		2	0.027 - 0.045
		3	0.029 - 0.047
10	Big end bearings	L	1.544 - 1.548
	⌀ FIAT <		0.254 - 0.508
10–8	Big end bearings–Crankpins	A	0.024 - 0.048
		B	0.030 - 0.054
		C	0.036 - 0.060
11	Thrust bearings	S	2.310 - 2.360
	S FIAT >		0.127
11–8	Crankshaft end float		0.055 - 0.265

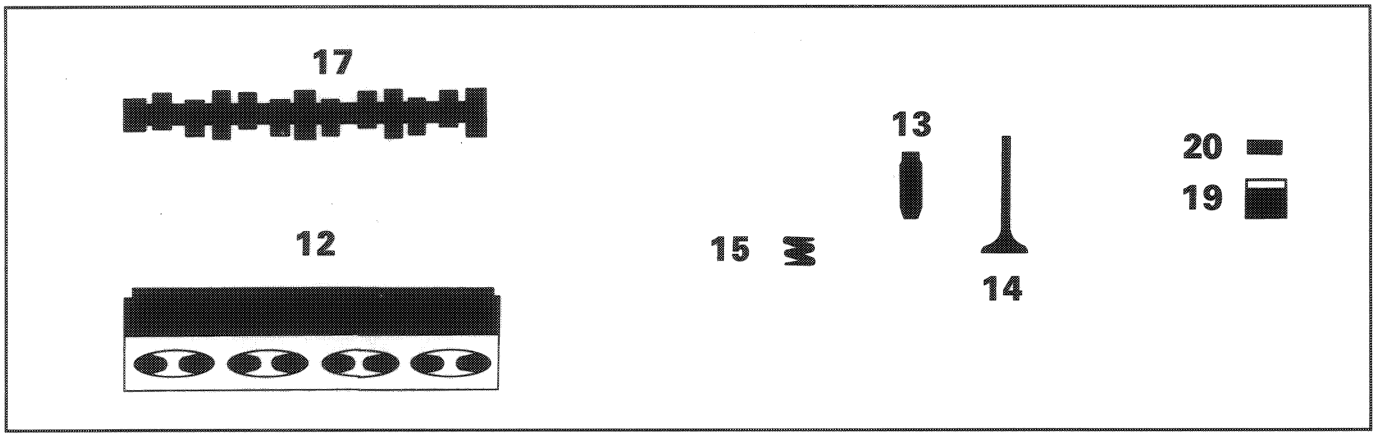

DESCRIPTION		1108 Values in mm
Camshaft journal seats in cylinder head	$Ø_1$	24.045 - 24.070
	$Ø_2$	23.545 - 23.570
	$Ø_3$	24.045 - 24.070
Volume of combustion chamber in cylinder head	cm³	23.41
12 Tappet seating on cylinder head	Ø	35.000 - 35.025
Valve guide bore in cylinder head	Ø	12.950 - 12.977
Valve seats	α	45° ± 5′
	α	45° ± 5′
	L	1.73
	L	1.58

DESCRIPTION		Values in mm
13 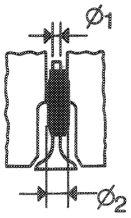 Valve guide	Ø1	7.022-7.040
	Ø2	13.010-13.030
	Ø2 FIAT >	0.05 - 0.10 - 0.25
13-12 Valve guide - Bore in cylinder head		0.033 - 0.080
14 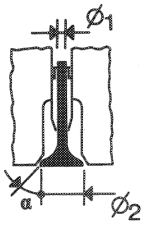 Valves	Ø1	6.982 - 7.000
	Ø2	31.20 - 31.50
	α	45°30′±5′
	Ø1	6.982 - 7.000
	Ø2	27.20 - 27.50
	α	45°30′±5′
14-13 Valve - Valve guide		0.022 - 0.058
15 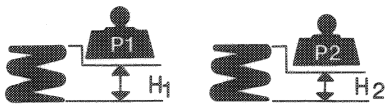 Valve spring	P_1	18.38 - 20.93 daN
	H_1	32.1
	P_2	57.3 - 61.4 daN
	H_2	22.6
17 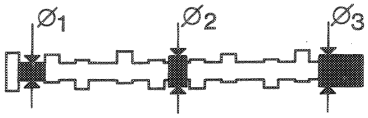 Camshaft journals	Ø1	24.000 - 24.015
	Ø2	23.500 - 23.515
	Ø3	24.000 - 24.015
Cam lift 		8.8

00.10

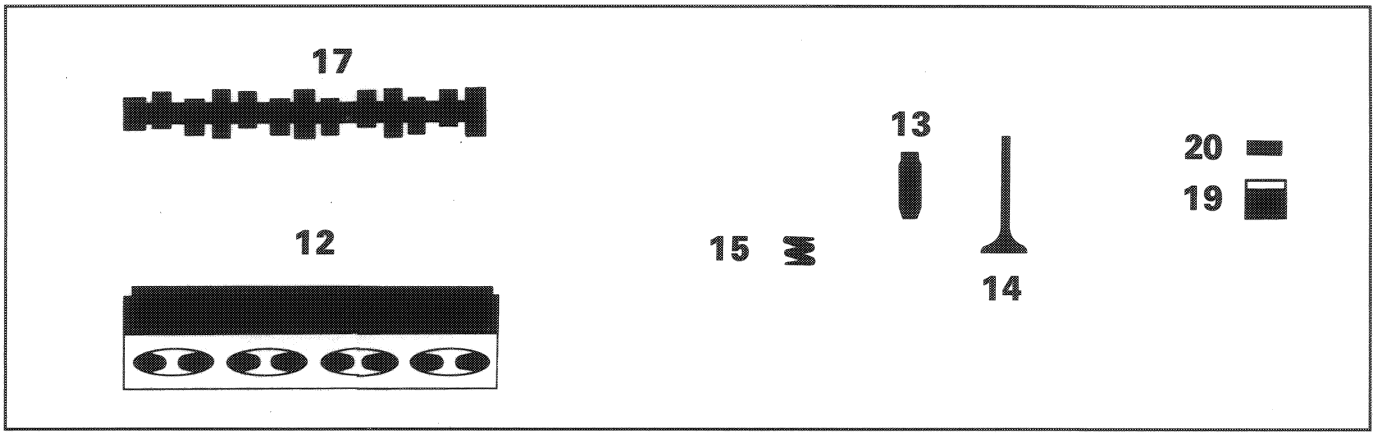

DESCRIPTION		Values in mm
17-12 Camshaft journals Seating in cylinder head	Ø1	0.030 - 0.070
	Ø2	0.030 - 0.070
	Ø3	0.030 - 0.070
19 Tappet	Ø	34.975 - 34.995
19-12 Tappet - Seat in cylinder head		0.005 - 0.050
20 Shim	S (0.05)	3.20 - 4.70
17-20 clearance for timing check		0.80
operating		0.40 ± 0.05
		0.50 ± 0.05

TIMING DIAGRAMS

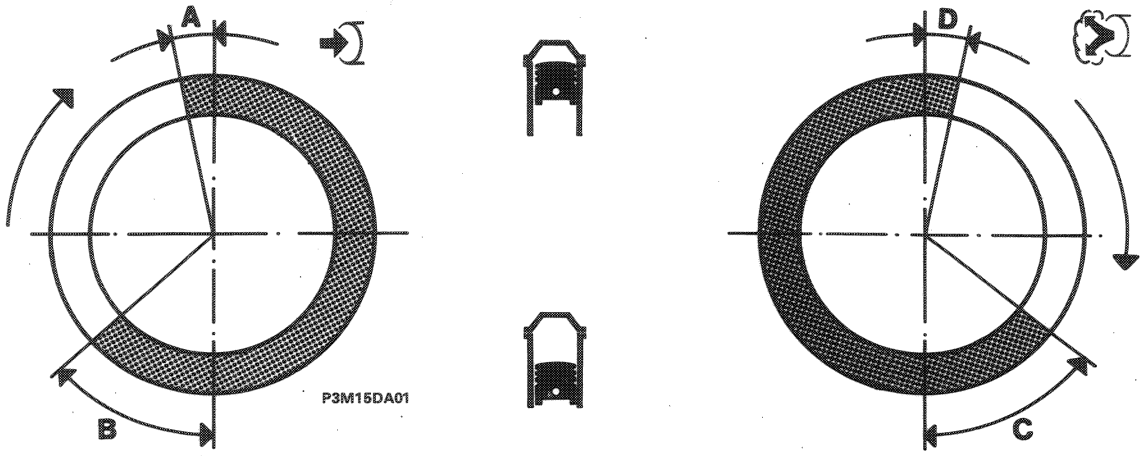

Timing angles

			1108
A	Inlet	start before TDC	7°
B		end after BDC	35°
C	Exhaust	start before BDC	37°
D		end after TDC	5°

LUBRICATION - Description		1108 Values in mm
Engine lubrication system		artificial circulation, driven by lobe-gear pump with cartridge filter in series
Oil pump		lobe gear type
Pump drive		from crankshaft
Oil pressure relief valve		built into crankshaft front cover
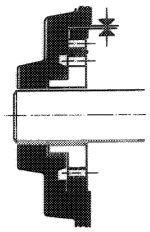 between pump housing and driven gear		0.080 - 0.186
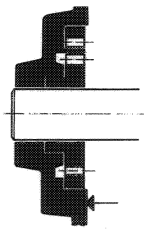 between the upper side of the gears and the pump cover		0.025 - 0.056
Full flow filter		cartridge
Low oil pressure sender		electrical
 Operating pressure at temperature of 100°C	at idle speed	0.7 bar
	at 4000 rpm	4 bar ± 0.4
 Oil pressure relief valve spring	P_1	4.45 - 4.94 daN
	H_1	34.1

COMPONENTS OF THE ELECTRONIC FUEL INJECTION SYSTEM

	1108
Electronic control unit	I.A.W. 16F.EB
Throttle body (with built-in fuel pressure regulator)	30 MM 12
Absolute pressure sensor	M. Marelli PRT-03/02
Throttle valve position sensor	M. Marelli PF 2C/00
Fuel injector	WEBER IWM 523/00
Air temperature sensor	M. Marelli ATS 05/00
Coolant temperature sensor	ELTH 269032
Double relay for electrical fuel pump and fuel injection-ignition control unit	WEBER DRS 240 103/00
Electric fuel pump	MARWAL MSS 070/01
Lambda probe	Bosch 0.258.003.222
Fuel filter	Bosch A450024.198

CHARACTERISTICS		1698 D	1698 TD
Cycle		DIESEL, 4 stroke	
Timing gear		single overhead cam	
Fuel system type		Indirect mechanical fuel injection	
Number of cylinders		4	
Cylinder bore (bore)	mm	82.6	
Stroke	mm	79.2	
Capacity	cm³	1698	
Compression ratio		20.5±0.5	19±0.5
Maximum power	kW (EEC)	42	51
	(bhp) (EEC)	(57)	(70)
	rpm	4500	
Maximum torque	daNm (EEC)	9.8	13.4
	(kgm) (EEC)	(10)	(13.7)
	rpm	2500	

TYPICAL ENGINE CURVES MEASURED BY EEC METHOD

The curves illustrated are those obtained with engines overhauled and run in (50 hours of operation) without fan, with exhaust silencers and air cleaners and at sea level.

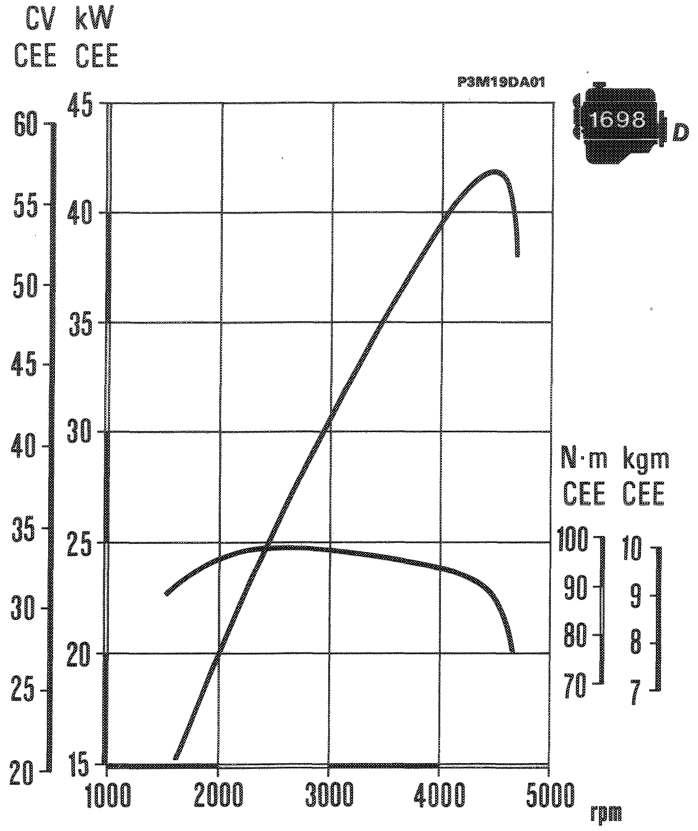

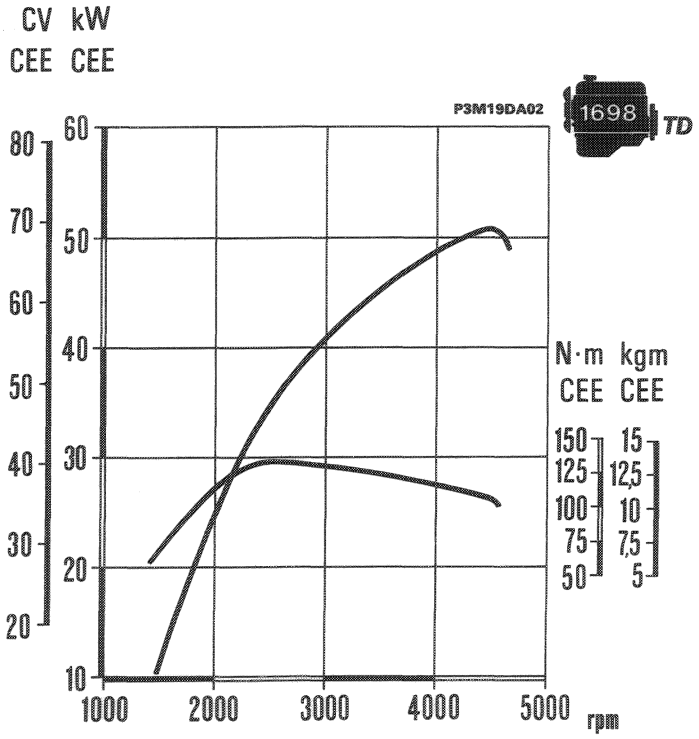

Bench test cycles for overhauled engines

When bench testing overhauled engines, it is not advisable to bring the engines up to maximum rpm, but instead adhere to the data specified in the table; finish running in the engines on the car.

Test speed (rpm)	Time in minutes	Brake load
800-1000	10′	no load
1500	10′	no load
2000	10′	no load

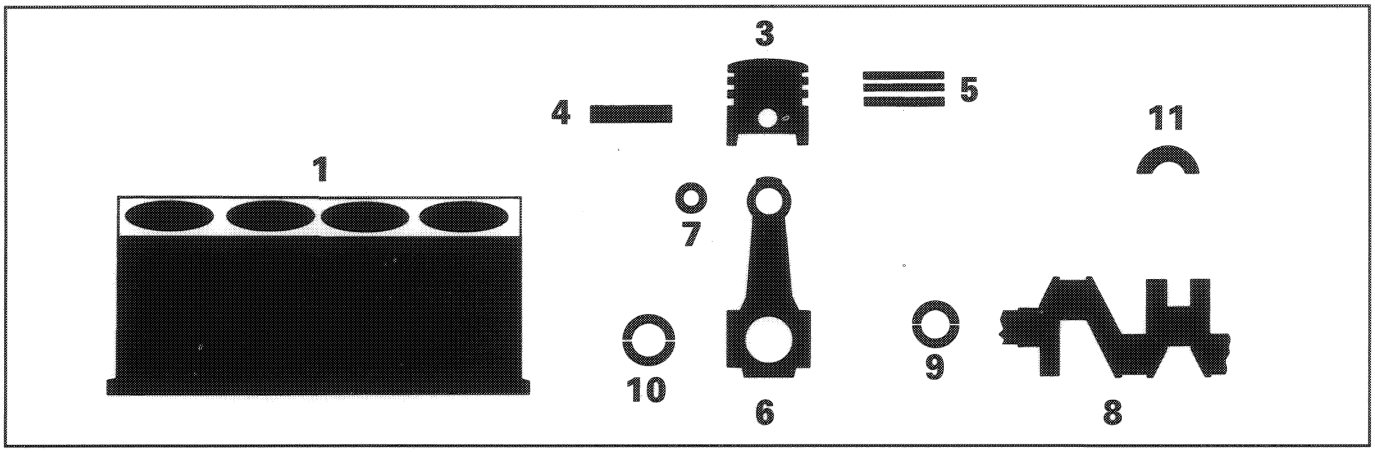

	1698 D	1698 TD

DESCRIPTION		Values in mm	
1 Main bearings	L	23.120 - 23.200	
	Ø	56.717 - 56.735	
Cylinder bore	Ø (0.010)	82.600 - 82.630	
3 Piston	X	15	
	Ø A	82.520 - 82.530	82.530 - 82.544
	Ø C	82.530 - 82.540	82.540 - 82.550
	Ø E	82.540 - 82.550	82.550 - 82.560
	Ø FLAT A >	0.4	
3-1	Piston projection	0.707 - 1.192	0.507 - 0.992
3	Weight difference between pistons	± 5 g	
3-1	Piston Cylinder bore	0.070 - 0.090	0.060 - 0.080

DESCRIPTION			1698 D	1698 TD
			Values in mm	
3	Gudgeon pin housing	1	24.996 - 24.999	25.993 - 25.996
		2	24.999 - 25.002	25.996 - 25.999
3	Piston ring grooves	1	2.175 - 2.205 (*)	2.675 - 2.705 (*)
		2	2.010 - 2.030	2.010 - 2.030
		3	3.020 - 3.040	3.020 - 3.040
4	Gudgeon pin	1	24.987 - 24.990	25.987 - 25.990
		2	24.990 - 24.993	25.990 - 25.993
		Ø FIAT >	0.2	
4-3	Gudgeon pin - Housing		0.006 - 0.012	0.003 - 0.009
5	Piston rings	1	2.075 - 2.095 (**)	2.575 - 2.595 (**)
		2	1.978 - 1.990	1.970 - 1.995
		3	2.975 - 2.990	2.975 - 2.990
		Ø FIAT >	0.4	
5-3	Piston rings Piston ring grooves	1	0.080 - 0.130 (**)	0.080 - 0.130 (**)
		2	0.020 - 0.052	0.015 - 0.060
		3	0.030 - 0.066	0.030 - 0.065
5-1	Piston ring end gap in cylinder bore	1	0.300- 0.500	0.200- 0.350
		2	0.300 - 0.500	0.250 - 0.500
		3	0.250 - 0.500	0.250 - 0.500

(*) Measured on diameter of 79.6 mm (**) Measured 1.5 mm from outer edge

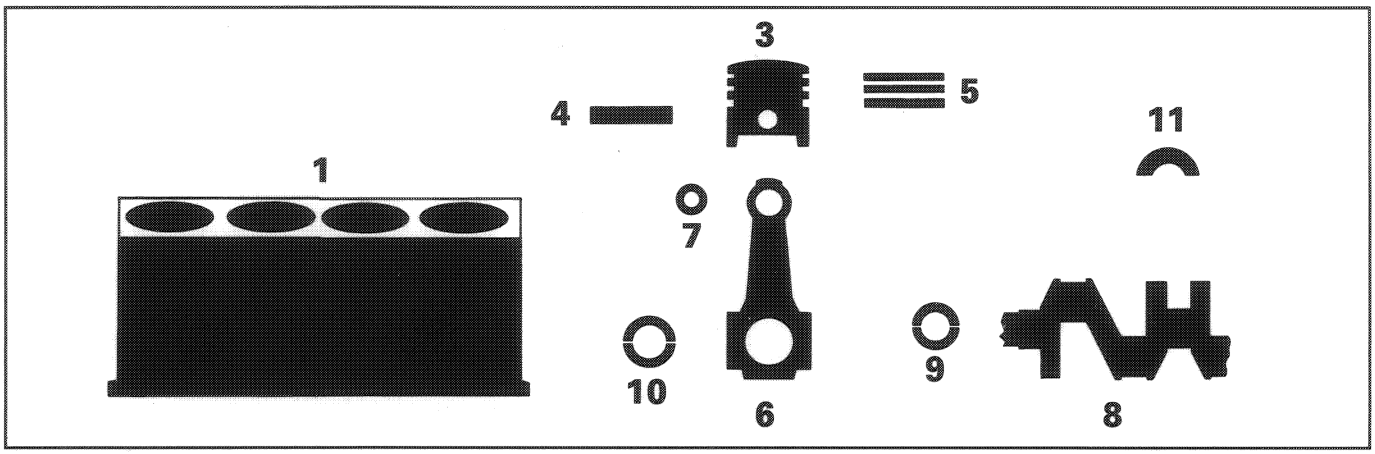

DESCRIPTION			1698 D	1698 TD
			Values in mm	
6	Small end bush or journal seat	Ø1	26.939-26.972	27.939-27.972
	Big end bearing seat	Ø2	53.897 - 53.913	
6	Difference in weight between con rods		± 2.5 g	
7	Small end bush	Ø1	27.020 - 27.060	28.020 - 28.060
		Ø2 1	25.004 - 25.007	26.004 - 26.007
		Ø2 2	25.007 - 25.010	26.007 - 26.010
4-7	Gudgeon pin Small end bush		0.014 - 0.020	
7-6	Small end bush Bush seating		0.048 - 0.121	
8	Main journals	Ø1 1	53.004 - 52.995	
		Ø1 2	52.995 - 52.986	
	Crankpins	Ø2 A	50.805 - 50.796	
		Ø2 B	50.796 - 50.787	
		L	27.975 - 28.025	

DESCRIPTION			1698 D	1698 TD
			Values in mm	
9	Crankshaft bearings	L 1	1.839 - 1.843	1.837 - 1.843
		L 2	1.843 - 1.847	1.843 - 1.849
		Ø FIAT <	0.254 - 0.508 - 0.762 - 1.016	
9–8	Main bearings–Journals		0.027 - 0.062	0.027 - 0.066
10	Big end bearings	L A	1.528 - 1.532	1.527 - 1.533
		L B	1.533 - 1.537	1.533 - 1.539
		Ø FIAT <	0.254 - 0.508 - 0.762 - 1.016	
10–8	Big end bearings–Crankpins		0.028 - 0.061 0.027 - 0.060	0.026 - 0.063
11	Thrust bearings	S	2.347 - 2.363	
		S FIAT >	0.127	
11–8	Crankshaft end float		0.049 - 0.211	

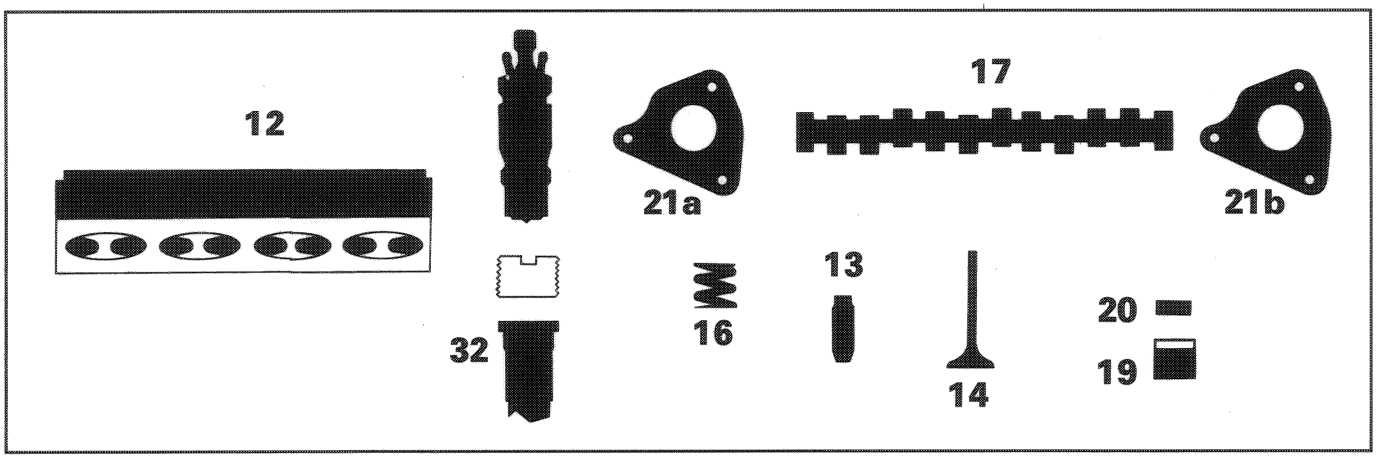

1698 D	1698 TD

DESCRIPTION		Values in mm
Valve guide bore in cylinder head	Ø	13.950 - 13.977
Valve seats	α	45° ± 5′
	α	45° ± 5′
	L	about 2.3
Camshaft journal seats in cylinder head	$Ø_1$	43.020 - 43.040
	$Ø_2$	25.545 - 25.570
	$Ø_3$	24.045 - 24.070
	$Ø_4$	43.020 - 43.040
	L*	18.950 - 19.030
Tappet seating	Ø	37.000 - 37.025
Pre-chamber seat on cylinder head	$Ø_1$	-
	$Ø_2$	26.450 - 26.471
	$Ø_3$	22.150 - 22.200
	X	52.035 - 52.235

(*) Rear cap measurement

			1698 D	1698 TD
DESCRIPTION			Values in mm	
13	Valve guide	Ø1	8.022 - 8.040	
		Ø2	14.040 - 14.058	
		Ø2 FIAT >	0.05 - 0.10 - 0.25	
13-12	Valve guide / Bore in cylinder head		0.063 - 0.108	
14	Valve	Ø1	7.974 - 7.992	
		Ø2	37.300 - 37.600	
		α	45°30′ ± 7′	
		Ø1	7.974 - 7.992	
		Ø2	33.300 - 33.600	
		α	45°30′ ± 7′	
14-13	Valve - Valve guide		0.030 - 0.066	
16	Valve spring	P_1	36.69 - 39.63 daN	
		H_1	36	
		P_2	55.91 - 60.82 daN	
		H_2	26.5	
17	Camshaft journals	Ø1	29.945 - 29.960	
		Ø2	25.500 - 25.515	
		Ø3	24.000 - 24.015	
		Ø4	23.945 - 23.960	
		L	19.100 - 19.200	
17-12		radial	0.030 - 0.070	
		axial	0.070 - 0.250	
17	Cam lift		8.8	
			8.8	

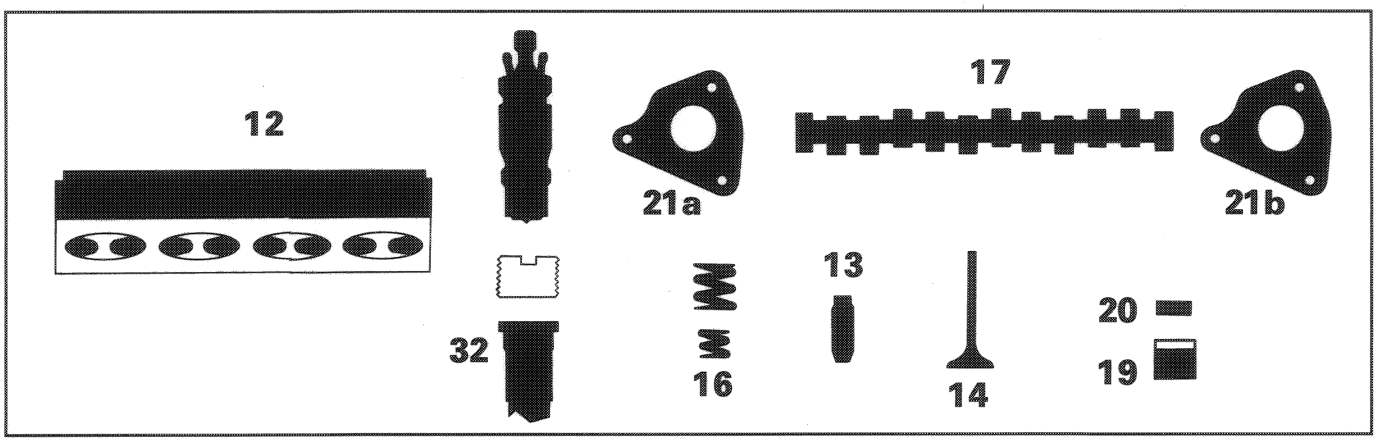

1698 D	1698 TD

DESCRIPTION		Values in mm
19	Tappet Ø	36.975 - 36.995
19-12	Tappet - Cylinder head	0.005 - 0.050
20	Shim S (0.05)	3.25 - 4.70
17-20	clearance for timing check	0.50
		0.50
	operating	0.30 ± 0.05
		0.35 ± 0.05
21a-21b	Camshaft bearings $Ø_1$	29.990 - 30.015
	$Ø_2$	23.990 - 24.015
17-21a 17-21b	Camshaft Supports	0.030 - 0.070
32-12	Variation between pre-combustion chamber plane and cylinder head plane	0.403 - 0.766

TIMING DIAGRAMS

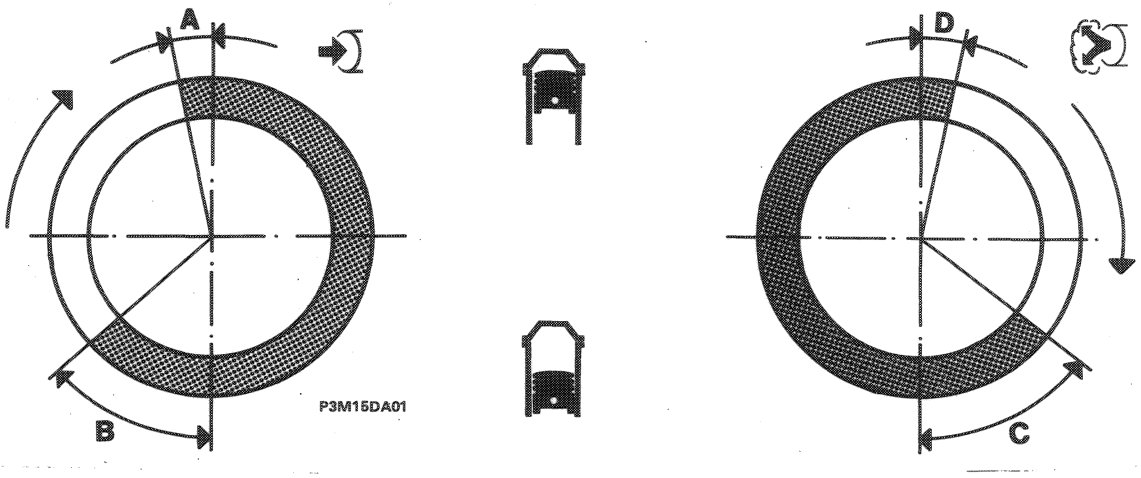

			1698 D	1698 TD
Timing angles				
A	Inlet	start before TDC	4°	
B	Inlet	end after BDC	32°	
C	Exhaust	start before BDC	32°	
D	Exhaust	end after TDC	4°	

After checking the recess or projection of the piston from the cylinder block top surface in order to keep the compression ratio within the tolerance limits, fit a cylinder head gasket of the thickness stated in the following table:

Average piston projection		Cylinder head gasket thickness	No. of notches
Up to 0,80	Up to 0.1	1.65 mm	–
From 0.80 to 0.95	From 1 to 1.15	1.80 mm	1
Over 0.95	Over 1.15	1.95 mm	2

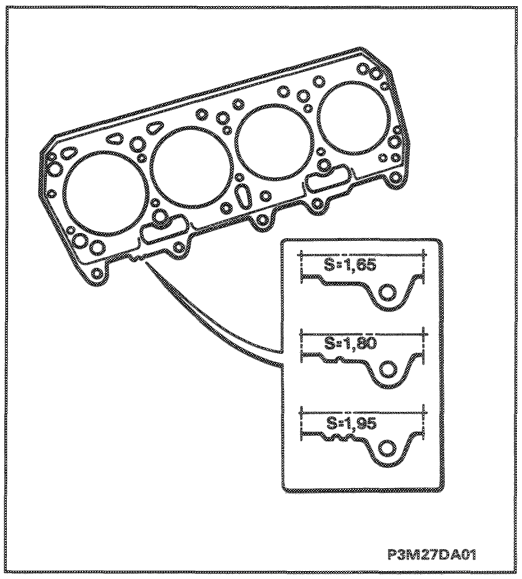

	1698 D	1698 TD
LUBRICATION - Description	Values in mm	
Engine lubrication system	artificial circulation, driven by lobe-gear pump with cartridge filter in series	
Oil pump	lobe gear type	
Pump drive	from crankshaft	
Oil pressure relief valve	built into crankshaft front cover	
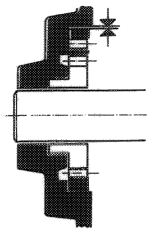 between pump housing and driven gear	0.080 - 0.186	
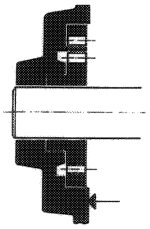 between the upper side of the gears and the pump cover	0.025 - 0.056	
Full flow filter	cartridge	
Low oil pressure sender	electrical	
 at idle speed	>1.5 bar	
4000 rpm Operating pressure at temperature of 100°C	>5 bar	>4.5 bar
 P_1	6.27 - 7.06 daN	
Oil pressure relief valve spring H_1	36	

COOLING SYSTEM

		1698 D	1698 TD
Cooling circuit		with coolant circulation driven by centrifugal pump, radiator, expansion tank and two-speed fan driven by thermostatic switch	
Water pump drive		by belt	
Thermostatic switch for starting up fan		1st speed	2nd speed
		86° - 90°C	90° - 94°C
	stop	81° - 85°C	85° - 89°C
Engine coolant thermostat	starts opening	78° - 82°C	
	fully open	86° - 82°C	
	valve travel	7.5 mm	
Clearance between impeller blades and pump body		0.5 - 1.3 mm	
Radiator water-tightness test pressure		1 bar	
Check on calibration of expansion tank pressure relief spring		1 bar	

FUEL SYSTEM

Rotary type fuel injection pump		LUCAS CAV FT08	BOSCH VE R 537/1
Fuel injector		CAV 6732604C	BOSCH 0.432.217.195
Nozzle holder type		CAV LCR 67326 CAV LRC 67326	BOSCH KCA 30 S 41
Nozzle type		CAV BDN OSDC 6751C CAV RDN OSDC 6751C	BOSCH DN 12 SD 290
Injector setting pressure	new inject.	124-131 bar	150-158 bar
	after run-in	116-123 bar	
Setting timing of injection pump: with piston of cylinder no. 1 at TDC (compression stroke)		0°±1° at TDC	piston stroke = 0.93±0.05 mm 1°±1° at TDC
Engine idle speed		810±40 rpm	900±20 rpm
Maximum free running engine speed		5150±50 rpm	5200-5300 rpm

CHECK DATA FOR BOSCH VE R 537/1 FUEL INJECTION PUMP

GENERAL TEST CONDITIONS

- Test fluid: ISO 4113
- Test fluid temperature: 45° ± 1°C (back flow outlet ●)
- Pump inlet pressure: 0.35 bar
- Rotation: clockwise

SPECIFIC TEST CONDITIONS

- Injectors: Bosch 1.688.901.022
- Nozzles: Bosch (DNO SD 1510) calibrated to 130 - 133 bar
- Pipes: 2x6x450 mm.

Type of check	Regulator lever position	Rotation speed rpm	Advance check mm	Transfer pressure bar	Flow rate per stage mm³/cycle	Max. spread between flow rates mm³/cycle	Turboch. pressure bar
Advance	Max	1000	0.8-2.0	3.9-4.5	–	–	1
	Max	1500	3.6-4.6	5.2-8.8	–	–	1
	Max	2300	7.7-8.7	7.2-8	–	–	1
Capacity	Max	750	–	–	26.5-30.5	–	0
	Max	1100	–	–	27.5-33.5	–	0
	Max	1100	–	–	35.5-39.5	–	0.35
	Max	1500	–	–	39.5-43.5	⩽3	1
	Max	2300	–	–	38.5-44.5	–	1
	Max	2500	–	–	26.5-34.5	–	1
	Max	2625	–	–	13.0-21.0	–	1
	Max	2950	–	–	⩽3	–	1
Starting (enrichment)	Max	100	–	–	35-59	–	0
End of enrich-ment	Max	300	–	–	37-57	–	0
	Max	500	–	–	17-37	–	0
Back flow pressure (●)	Max	750	–	–	15-30 l/h	–	1
	Max	2300	–	–	20-50 l/h	–	1
Idle speed	Min	450	–	–	9-15	⩽3	0
Residual	Min	550	–	–	⩽3	–	0
Stop (●●)	Max	450	–	–	⩽3	–	0

cont. ☞

Type of check	Regulator lever position	Rotation speed rpm	Advance check mm	Transfer pressure bar	Flow rate per stage mm³/cycle	Max. spread between flow rates mm³/cycle	Turboch. pressure bar
Automatic (■) cold advance device (KSB)	Max	450	1.1-3.1	–	–	–	0
	Min	1000	2-4	–	–	–	0
(▲) 3rd stop calibration	Choked	1100	–	–	17-23	–	0

Fixed installation advance = 1° ± 1°
Electrical cut-off control: minimum operating voltage 8 V. Working voltage 11 - 13 V
Maximum engine rpm without load: 5250 ± 50 rpm
Engine idle speed: 880-920 rpm
(●) Fuel return from pump to fuel tank.
(●●) To be done with electrical cut-off control off
(■) Dismantle the KSB thermostatic bulb, fitting the special tool
(▲) Supply the potentiometer with a voltage of 3.70 V DC; place a 12 mm shim between the throttle lever and the 3rd stop screw; if necessary adjust the screw and check that the potentiometer's output voltage is 2.4±0.05 V DC.

To check the advance, make sure that the KSB thermostatic bulb is supplied with 12 V for at least 2 minutes before the test.

COMPONENTS OF THE EXHAUST EMISSION CONTROL SYSTEM	1698 TD
Exhaust emissions control unit	M. Marelli MCR 102 A
Modulating solenoid	Borg-Warner
Rpm sensor	M. Marelli SEN 8 U
Coolant temperature sensor	Weber WTS-05/01
Fuel injection pump with engine load potentiometric sensor	Bosch VE R 537/1
Exhaust gas recirculation E.G.R. valve	Pierburg 7.21954.00

TURBOCHARGING (with turbocompressor driven by exhaust gases with "waste-gate" valve)

Turbocompressor: type	Garrett T2 TB 0227
Maximum turbocharging pressure	0.77 bar

		1108	1698 D	1698 TD
		Values in mm		
Type		dry, single plate with bearing		
Operating mechanism		diaphragm spring		
Spring load	daN	350 375 (*)	385	425
Driven plate	Ø1	181.5	200	
	Ø2	127	137	
Distance between pedal in end of travel position and rest position		140 ± 5		145 ± 5
Clutch operation		mechanical		

(*) For 6 speeds and SX versions

GEARBOX

			1108	1108	1698 D	1698 TD
			1 3 5 / 2 4 6 R	1 3 5 / 2 4 R		
		Type	C.514.6.10	C.514.5.10	C.514.5.13	C.514.5.17
Synchronizers	spring ring (Porsche type)		-			
	free ring		1 3 5 / 2 4 6	1 3 5 / 2 4		
Gears	straight teeth		R	R		
	helical teeth		1 3 5 / 2 4 6	1 3 5 / 2 4		
Gear ratios		1	3.545	3.909		
		2	2.158			2.238
		3	1.480	1.480 (1.345 ●)	1.345	1.440
		4	1.121	1.121 (0.974 ●)	0.974	1.029
		5	0.902	0.902 (0.809 ●)	0.766	0.794
		6	0.744	-	-	-
		R	3.818			3.909

(●) For French market

00.21-27

		1108	1108	1698 D	1698 TD
DIFFERENTIAL					
Crown-wheel and pinion ratio		4.923 (13/64)	3.867 (15/58) 3.562● (16/57●)	4.071 (14/57)	3.714 (14/52)
Ratio at the wheels	1	17.452	15.116 (13.924●)	15.913	14.518
	2	10.624	8.345 (7.687●)	8.785	8.312
	3	7.286	5.723 (4.791●)	5.745	5.348
	4	5.519	4.335 (3.469●)	3.965	3.822
	5	4.440	3.488 (2.882●)	3.118	2.949
	6	3.663	-	-	-
	R	18.796	14.764 (13.600●)	15.543	14.518
Inner differential case bearing		tapered roller			
Bearing preload adjustment		by shims			
Shim thickness	mm	2 - 3			1.70-2.89
Specified interference for obtaining correct bearing preload	mm	bearings not preloaded = 0.12 bearings preloaded (350 daN) = 0.08			
Sun gear-planet gear backlash	mm	-		≤0.10	
Adjusting sun gear-planet gear backlash		-			no adjustment is made

(●) For French market

FRONT BRAKES

			1108	1698 D	1698 TD
			Values in mm		
Disc		Ø	240		257
	s		10.8 - 11.1		11.8-12.10
	s		9.55		10.55
	s	< permitted	9.2		10.20
Brake pads	s	< permitted	1.5		
Caliper		Ø	48		
Master cylinder (pump)		Ø	20.65 (13/16")		
Servo unit			Isovac 8" vacuum acting on all four wheels		

REAR BRAKES

Drum	Ø		180 - 180.25	
	Ø		180.85	
	Ø	> permitted	181.35	
Shoes	s	< permitted	1.5	
Wheel cylinders		Ø	20.60	
Reduction ratio		Pressure regulators	0.25	-
		Load proportioning valves	0.30 (*)	0.34

* For 6 speed versions

ENGINE	1108	1698 D	1698 TD
Type	rack-and-pinion variable ratio	rack-and-pinion with power steering	
Ratio — turns lock-to-lock	about 4.4	about 2.9	
Ratio — rack travel	137 mm		
Minimum turning circle	9.7 m		
Steering angle — outer wheel α_1	33°38′	33°46′	33°40′
Steering angle — inner wheel α_2	38°12′	38°02′	38°08′
Steering column	with 2 universal joints		

VERSION	Wheel rim stamped plate, tipe	Tubeless tyre radial, type	Tyre pressures			
			Front		Rear	
			average load	full load	average load	full load
1108	4.5 B x 13" 5.0 B x 13" 5.0 B x 14" 5.0 B x 14" (*)	155/70 R 13" 165/65 R 13" 165/60 R 14" 165/60 R 14" (*)	2 bar	2.2 bar	1.9 bar	2.2 bar
1698 D	5.0 B x 13"	165/70 R 13"	2.4 bar		2 bar	2.2 bar
1698 TD	5.0 B x 14"	165/65 R 14" 175/60 R 14"				
Spare wheel	4.5 B x 13" 4.5 B x 14"	135/80 B 13" 135/80 B 14"	2.8 bar			

(*) For 6 speed version

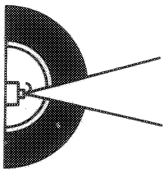

car unladen (*)

WHEEL GEOMETRY

		1108	1698 D	1698 TD
Front suspension	camber (**)	– 0°18′ ± 30′	– 0°16′ ± 30′	– 0°15′ ± 30′
	caster (**)	1° 20′ ± 30′	2° 30′ ± 30′	2° 30′ ± 30′
	toe-in	0 ± 1 mm		
Rear suspension	camber (**)	– 0° 15′ ± 30′	– 0° 2′ ± 30′	– 0° 15′ ± 30′
	toe-in (**)	1.3 ± 2 mm	1.2 ± 2 mm	1.3 ± 2 mm

(*) With tyres inflated to the correct pressure and vehicle in running order
(**) Non-adjustable angles

Front suspension independent, Mac Pherson type with wishbones connected by rubber bushes to a steering subframe.
Offset coil springs and hydraulic, double-effect shock absorbers.
Sealed-for-life joints.

Coil springs

			1108	1108 (■)	1698 D	1698 TD
Part number			7778396	7778398	7778401	7778402
Wire diameter		mm	12.2±0.1	11.5±0.1	12.1±0.1	12.2±0.1
Number of useful coils			3.25	4.25	5.25	
Coil direction			clockwise			
Uncompressed spring height		mm	331	380	420	423.5
Spring height under a load of:	270 ± 10 daN	mm	210.5	-	-	-
	275 ± 10 daN	mm	-	210.5	-	-
	327 ± 10 daN	mm	-	-	210.5	-
	343 ± 10 daN	mm	-	-	-	210.5
The springs are divided into two categories, identifiable by a mark:						
yellow (1) if under load of:	270 daN	height is mm	>210.5	-	-	-
	275 daN	height is mm	-	>210.5	-	-
	327 daN	height is mm	-	-	>210.5	-
	343 daN	height is mm	-	-	-	>210.5
green (1) if under load of:	270 daN	height is mm	⩽210.5	-	-	-
	275 daN	height is mm	-	⩽210.5	-	-
	327 daN	height is mm	-	-	⩽210.5	-
	343 daN	height is mm	-	-	-	⩽210.5

(1) Springs with matching marks must be fitted.

(■) For 6 speed versions

Shock absorbers

Type: telescopic, double-acting		Telescopic, hydraulic, double-acting		
Part number		7778834	7752624	7779652
Travel (start of damping)	mm	171		
Maximum extension	mm	466±2.5		

Rear suspension independent, with coil springs.
Cast iron wishbones mounted on bearings.
Anti-roll bar. Rubber buffers.

Coil springs

			1108	1108 (■)	1698 D	1698 TD
Part number			7756588	7756589		
Wire diameter		mm	12.3±0.05	11.9±0.05		
Number of useful coils			4.5	4.75		
Coil direction			clockwise			
Uncompressed spring height		mm	264	277		
Spring height under load of:	299 ± 11 daN	mm	185	-		
	294 ± 10 daN	mm	-	185		
The springs are divided into two categories, identifiable by a mark:						
yellow (1) if under load of:	299 daN	height is mm	>185	-		
	294 daN	height is mm	-	>185		
green (1) if under load of:	299 daN	height is mm	⩽185	-		
	294 daN	height is mm	-	⩽185		

(1) Springs with matching marks must be fitted.

Shock absorbers

Type: telescopic, hydraulic, double-acting		Way-Assauto o Boge
Part number	BOGE	7789196
	WAY-ASSAUTO	7719070
Travel (start of damping)	mm	87
Maximum extension	mm	299 ± 2

(■) For 6-speed version

	1108	1698 D	1698 TD
STARTER MOTOR	M. Marelli E80-12V-0.8kW	Bosch DW-12V-1,7kW	
ALTERNATOR	M. Marelli A115I-14V-38/65A		
VOLTAGE REGULATOR	Built in electronic RTM 121A		
BATTERY	12V-32 Ah-150A	12V-60 Ah-320A	
IGNITION SYSTEM	I.A.W. integrated electronic ignition-fuel injection	-	
IGNITION COIL	M. Marelli BAE 800 AK	-	
SPARK PLUGS	Champion RC9YCC M. Marelli L7LCR	-	
PLUG PREHEATING CONTROL UNIT	-	SIPEA 2854	
HEATER PLUGS	-	Bosch 0.250.201.033 BERU 0.100.226.185	

STARTER MOTOR

		1108
Type		M. Marelli E80E - 12V - 0.8 KW
Voltage	V	12
Nominal power	kW	0.8
Rotation, pinion side		right-hand
No. of poles		4
Excitation		in series
Engagement		roller clutch
Operation		solenoid
Armature shaft endfloat	mm	0.2 - 0.4
Bench test data		
Operating test (*):		
current	A	180
speed	rpm	1800
voltage	V	9.2
torque developed	daNm	0.4
Engagement test (*):		
current	A	3.10
voltage	V	7.4
torque developed	daNm	1.18
Free running test (*):		
current	A	43 - 47
voltage	V	12
speed	rpm	11350 - 12000
Relay		
Winding resistance (*)	pull in Ω	0.30
	hold in Ω	1
Lubrication		
Engagement inner splines		MOLIKOTE 05-7325
Boccole		AT 150

(*) Data measured at environmental temperature of 20°C.

NOTE *During overhaul, it is not necessary to undercut the insulation between the commutator segments*

SOLID STATE ELECTRONIC IGNITION-FUEL INJECTION

Type	Solid state electronic ignition integrated with the Weber - Marelli fuel injection system
Type	IAW 16F.EB
Firing order	1 – 3 – 4 – 2

IGNITION COIL WITH 2 HIGH-TENSION TERMINALS

Make		M. Marelli
Type		BAE 800 AK
Resistance of primary winding at 23°C	Ω	0.495 - 0.605
Resistance of secondary winding at 23°C	Ω	6660 - 8140

RPM AND TOP DEAD SENSOR SENSOR

Make and type		M. Marelli 7777960	Bosch B 265461461
Sensor winding resistance	Ω	575 - 750	-
Gap between sensor and crankshaft pulley lug	mm	0.5 - 1.5	0.8 - 1.5

ADVANCE ON ENGINE

With engine idling	- (*)

(*) Mapped in control unit with no possibility of adjustment

SPARK PLUGS

Make and type	Champion	RC9YCC
	M. Marelli	L7LCR
Thread		M 14×1.25
Electrode gap	mm	0.85 - 0.95

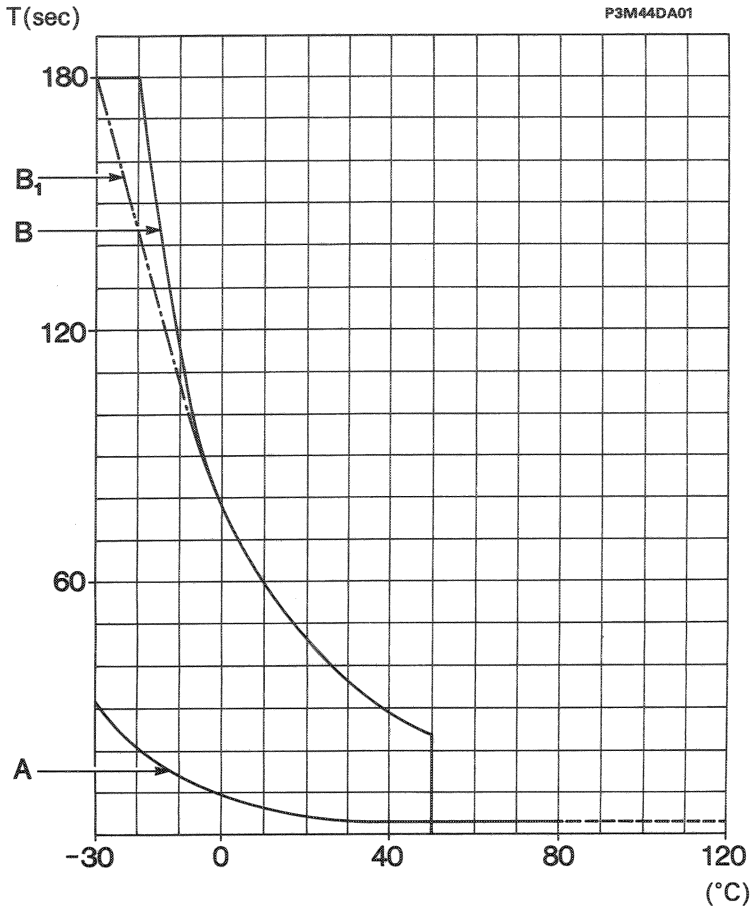

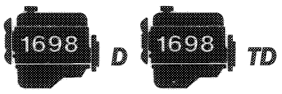

Variations in plug preheating time

- The curve A indicates the preheating times (plugs supplied, warning light on) in accordance with the engine coolant temperature.
- Preheating must not be interrupted for coolant temperature < 80 °C
- "Maintenance" time (plugs supplied, warning light off) = 10 s constant, counted from when the warning light goes out.
- The curve B indicates the post-heating times (spark plugs supplied, warning light off) counted from when the engine starts.
- At the end of the post-heating stage, the device switches itself off.
- B1 = permitted post-heating curve.

PART	Thread	Tightening torques daNm	ENGINE 1108	ENGINE 1698 D	ENGINE 1698 TD
ENGINE					
Bolt securing intermediate and central caps to engine block	M12×1.25	11.3		●	●
Self-locking bolt securing front and rear caps to engine block	M12×1.25	11.3		●	●
Bolt securing engine vent case to engine block	M8×1	2		●	●
Bolt securing cylinder head to engine block	M8	3		●	●
Nut securing inlet and exhaust manifolds	M8	2.5		●	●
Lag screw for connecting rod	M10×1	2.5+50°		●	●
Nut securing engine hoisting bracket	M8	2.5		●	●
Hexagonal-headed screw securing oil sump	M6	1		●	●
Hexagonal-headed screw with shake-proof conical washer for securing crankshaft cover to engine block (flywheel side)	M6	1		●	●
Bolt securing crankshaft cover to engine block (timing side)	M6	1		●	●
Self-locking bolt securing flywheel	M12×1.25	14.2		●	●
Bolt securing sprocket to camshaft	M12×1.25	11.8		●	●
Ring nut securing precombustion chamber to head	M35×1.5	11.8		●	●
Nut securing belt tensioner bearing	M10×1.25	4.4		●	●
Bolt securing fixed belt tensioner bearing	M10×1.25	4.4		●	●
Nut for stud securing camshaft cap	M8	1.9		●	●
Nut securing front and rear bearings for camshaft and air vacuum	M8	1.9		●	●
Nut for fuel injection pump stud	M8	2.5		●	●

PART	Thread	Tightening torques daNm	ENGINE 1108	ENGINE 1698 D	ENGINE 1698 TD
Bolt securing fuel injection pump	M8	2.5		●	●
Bolt securing camshaft front bearing and timing belt cover	M8	2		●	●
Nut securing fuel injection pump sprocket	M12	4.9		●	●
Hexagonal-headed screw securing rear reaction bracket to fuel injection pump to bottom bracket	M8	2.9		●	●
Flanged hexagonal-headed bolt securing reaction bracket to engine block	M8	2.9		●	●
Top bolt securing oil filter mounting and fuel injection pump	M12×1.25	9.8		●	●
Bottom bolt securing oil filter mounting and fuel injection pump	M10×1.25	7.1		●	●
Bolt securing driving sprocket (left-hand thread) to crankshaft	M14×1.5 left	19		●	●
Bolt securing damping flywheel to driving sprocket	M8	2.8		●	●
Bolt securing cover and bracket to water pump body	M8	2.3		●	●
Thermostat bolt	M8	2		●	●
Thermometric switch on H_2O thermostat (COM KSB)	M8×1.25	1		●	●
H_2O thermostat water temperature sender unit	M12×1.5	3		●	●
Bolt securing alternator to its mounting	M12×1.25	6		●	●
Self-locking nut with nylon for securing alternator to top bracket	M10×1.25	4.3		●	●
Complete injector	M24×2	5.5		●	●
Incandescent starter plugs	M12×1.25	1.5		●	●
Water temperature sender unit on H_2O thermostat (controlling preheating control unit)	M16×1.5 tapered	3.4		●	●

PART	Thread	Tightening torques daNm	ENGINE 1108	ENGINE 1698 D	ENGINE 1698 TD
Water temperature sender unit on cylinder head	M16×1.5 tapered	3.4		●	●
Water overheating thermometric switch on cylinder head	M16×1.5 tapered	3.4		●	●
Oil pressure sender unit	M14×1.5	3.2		●	●
Connector securing heat exchanger and oil filter to mounting	M20×1.5	4.5		●	●
Bolt securing water pump to engine block	M8×1	2.5		●	●
Bolt securing water pump pulley	M8	2		●	●
Connector union on fuel injection pump	M12×1.5	3.2		●	●
Nut securing half-shaft mounting to engine block	M8	2.5		●	●
Union for LDA pipe connector on inlet manifold and fuel injection pump	M8×1	1.5		●	●
Nuts for tightening fuel delivery pipe to fuel injection pump and injector	M12×1.5	3		●	●
Bolt securing turbocharged air pipe to inlet manifold	M8	2		●	●
Nut securing EGR pipe and EGR or exhaust manifold	M8	2		●	●
Bolt securing to engine block water delivery pipe to pump	M8	2		●	●
LDA pipe connector on inlet manifold	M14×1.5	5		●	●
Bolt securing rocker cover	M6	1		●	●
Bolt for securing and adjusting alternator to engine block	M10×1.25	5		●	●
Bolt securing alternator to filter	M12×1.25	8		●	●
Oil temperature sender	M16×1.5 tapered	3.4		●	●

PART	Thread	Tightening torques daNm	ENGINE 1108	ENGINE 1698 D	ENGINE 1698 TD
Water temperature sender unit on inlet manifold	M12×1.5	1.2	●	●	●
Nut securing inlet and exhaust manifolds to cylinder head	M8	2.7	●	●	●
Bolt securing pulley (phonic wheel)	M8	2.2	●	●	●
Bolt securing prewiring bracket to pipe	M8	2.2	●	●	●
Bolt securing channel on prewiring bracket	M6	1	●	●	●
Bolt securing sensor on oil pump	M6	1	●	●	●
Bolt securing alternator rear mounting bracket	M10×1.25	5	●	●	●
Bolt securing earth cable to engine block	M8	2.2	●	●	●
Bolt securing half-shaft mounting to engine block	M10×1.25	5	●	●	●
Bolt securing front power steering mounting to pump body	M8	2	●	●	●
Bolt securing top bracket to power steering pump	M8	2	●	●	●
Bolt securing top bracket and mounting to inlet manifold	M8	2.5	●	●	●
Bolt securing power steering mounting to inlet manifold	M8	2	●	●	●
Bolt securing top power steering bracket to mounting	M8	2.5	●	●	●
Bolt securing bottom power steering bracket to water pump	M8	2.5	●	●	●
Bolt securing pulley to hydraulic pump	M8	2	●	●	●
Bolt securing bracket securing exhaust manifold to engine block	M10×1.25	5	●	●	●
Nut securing manifold mounting bracket	M8	3.4	●	●	●

PART	Thread	Tightening torques daNm	ENGINE 1108	ENGINE 1698 D	ENGINE 1698 TD
Nut securing turbine to exhaust manifold	M8	4		●	●
Bolt securing exhaust connector to turbine	M8	3		●	●
Union for connector on crankcase oil delivery pipe	M12×1.5	3.2		●	●
Union for oil discharge hose from turbine to sump	M16×1.5	4		●	●
Aire pressure switch on inlet manifold	M12×1.5	3		●	●
Bolt securing alternator rear ramp to bracket	M10×1.25	5		●	●
Bolt securing alternator to slot	M10×1.25	5		●	●
Bolt securing front bracket to rear bracket	M10	5		●	●
Bolt for rear bracket with outer casting	M10×1.25	5		●	●
Bolt securing casting on front bracket to central casting	M10×1.25	5		●	●
Hexagonal-headed screw with conical washer for securing alternator	M10×1.25	5		●	●
Hexagonal-headed screw securing engine mounting	M8	2.2		●	●
Hexagonal-headed screw securing plate to engine block	M10×1.25	5		●	●
Hexagonal nut securing tensioner	M8	2.2		●	●

POWER UNIT MOUNTING

Hexagonal nut securing rubber buffer to engine mounting	M12×1.25	9		●	●
Hexagonal nut securing mounting to gearbox	M12×1.25	5.5		●	●
Headed screw for securing engine gearbox	M12×1.25	8.5		●	●

PART	Thread	Tightening torques daNm	ENGINE 1108	ENGINE 1698 D	ENGINE 1698 TD
Bolt securing rubber mounting and complete bracket to longitudinal member (engine side)	M10×1.25	5	●	●	●
Nut securing rubber mounting to engine mounting	M12×1.25	9	●	●	●
Bolt securing rubber mounting to longitudinal member (engine side)	M10×1.25	5	●	●	●
Nut securing rubber mounting to gearbox mounting	M10×1.25	5	●	●	●
Self-locking nut securing gearbox mounting	M10×1.25	5	●	●	●
Flanged bolt securing rubber mounting to cross-member (differential side)	M8	4	●	●	●
Bolt securing rubber mounting to mounting (differential side)	M10×1.25	5	●	●	●
Bolt securing mounting to gearbox (differential side)	M10×1.25	9	●	●	●