	CHASSIS	ENGINE	VERSION	TRIM LEVEL	3 door	5 door	GEARBOX 5 speed	GEARBOX Aut.
1108 SPI	ZFA 176.000	176 B2.000	176 AQ 53F	S 55	●		●	
			176 BQ 53F (*)		●		●	
			176 AQ 55F			●	●	
			176 BQ 55F (*)			●	●	
			176 AQ 53P	SX 55	●		●	
			176 BQ 53P (*)		●		●	
			176 AQ 55P			●	●	
			176 BQ 55P (*)			●	●	
			176 AQ 63E	6 Speed	●		●(△)	
1242 SPI		176 B4.000	176 AR 53F	S 60	●		●	
			176 BR 53F (*)		●		●	
			176 AR 55F			●	●	
			176 BR 55F (*)			●	●	
			176 AR 53P	SX 60	●		●	
			176 BR 53P (*)		●		●	
			176 AR 55P			●	●	
			176 BR 55P (*)			●	●	
			176 AR 13F	Selecta	●			●
			176 AR 15F			●		●
			176 AR 52C	Cabrio	2 door		●	
			176 BR 52C (*)				●	
1242 MPI		176 A8.000	176 AC 53P	SX 75	●		●	
			176 AC 55P			●	●	
			176 AC 53A	ELX 75	●		●	
			176 AC 55A			●	●	
1242 16v		176 B9.000	176 AV 53A	ELX 85	●		●	
			176 AV 55B			●	●	
			176 BV 53A	Sporting			●	
			176 AV 52C	Cabrio	2 door		●	
1372 turbo		176 B6.000	176 AS 53H	GT	●		●	
1698 TD 60		176 B7.000	176 AT 53A	SX TD 60	●		●	
			176 AT 55A			●	●	
1698 TD 70		176 A3.000	176 CG 53P	SX TD 70	●		●	
			176 CG 55P			●	●	
			176 CG 53A	ELX TD 70	●		●	
			176 CG 55A			●	●	

(*) For the French market (△) 6 speed gearbox

Introduction

Location of identification data on vehicle

00.0

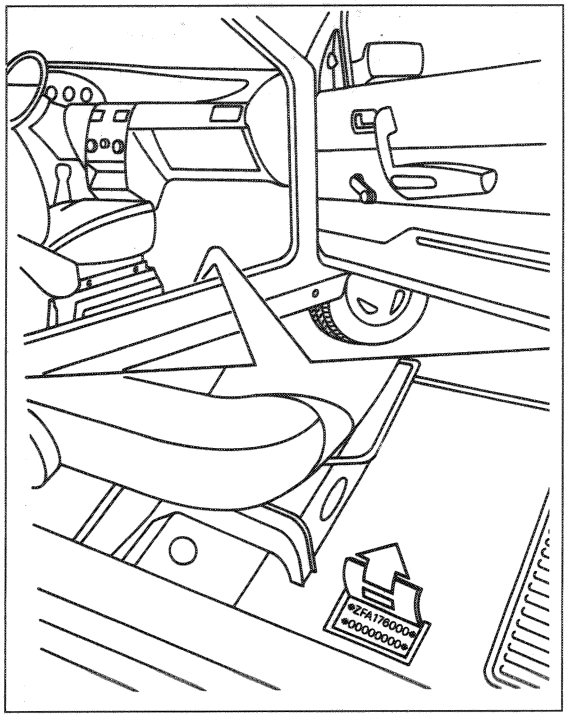

P3M01RA01

A. Engine type and number
B. V.I.N. Plate (EEC regulations)

A. Name of manufacturer
B. Homologation number
C. Vehicle type identification code
D. Chassis manufacture number
E. Maximum authorized weight of vehicle fully laden
F. Maximum authorized weight of vehicle fully laden plus tow
G. Maximum authorized weight on first axle (front)
H. Maximum authorized weight on second axle (rear)
I. Engine type
L. Bodywork version code
M. Spares number
N. Correct value of smoke absorption coefficient (Diesel engines only)

Vehicle type identification code and chassis manufacture number

Stamped on the floor panel of the passenger compartment, near the right front seat.
Access is gained by lifting up the special inspection window in the carpet.

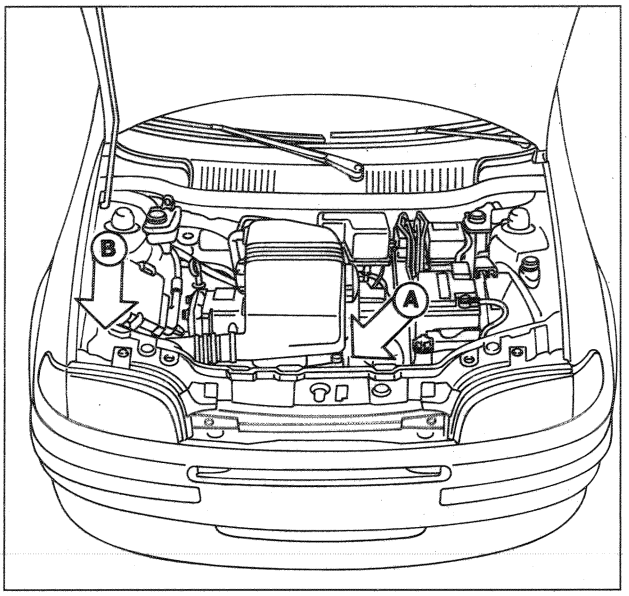

P3M01RA02

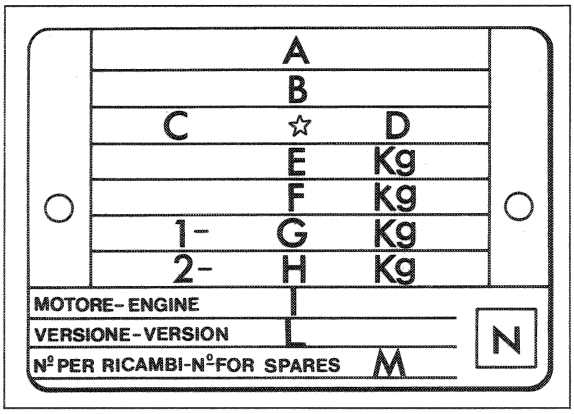

F3M01RA01

UPDATE IN ACCORDANCE WITH '97 EUROPEAN HOMOLOGATION

	CHASSIS	ENGINE	VERSION	TRIM LEVEL	3 door	5 door	GEARBOX 5 speed	GEARBOX Aut.
1108 SPI	ZFA 176 000	176 B2.000	176 AQ 53A 00	55	●		●	
			176 AQ 53A 00B(■)		●		●	
			176 AQ 55A 01			●	●	
			176 AQ 55A 01B(■)			●	●	
			176 AQ 63E 02		●		(△)	
			176 BQ 53A 03(*)		●		●	
			176 BQ 55A 04(*)			●	●	
1242 SPI		176 B4.000	176 AR 53A 05	60	●		●	
			176 AR 53A 05B(■)		●		●	
			176 AR 55A 06			●	●	
			176 AR 55A 06B(■)			●	●	
			176 BR 53A 10(*)		●		●	
			176 BR 55A 11(*)			●	●	
			176 AR 13P 07	60 Selecta	●			●
			176 AR 15P 08			●		●
			176 AR 52C 09	60 Cabrio	2 door		●	
			176 AR 52C 09B(■)				●	
			176 BR 52C 12(*)				●	
1242 MPI		176 A8.000	176 AC 53A 13	75	●		●	
			176 AC 53A 13B(■)		●		●	
			176 AC 55A 14			●	●	
			176 AC 53A 14B(■)			●	●	
1242 16v		176 B9.000	176 AV 53A 26	85 ELX	●		●	
			176 AV 53A 26B(■)		●		●	
			176 AV 55A 27			●	●	
			176 AV 55A 27B(■)			●	●	
			176 BV 53A 29	Sporting	●		●	
			176 BV 53A 29B(■)		●		●	
			176 AV 52C 28	Cabrio 16v	2 door		●	
			176 AV 52C 28B(■)				●	

(*) Versions for specific markets (France)
(△) 6 speed gearbox
(■) Voluntary for Germany

3M50RA

	CHASSIS	ENGINE	VERSION	TRIM LEVEL	3 door	5 door	GEARBOX 5 speed	GEARBOX Aut.
1372 turbo	ZFA 176 000	176 B6.000	176 AS 53H 23	GT	●		●	
1581 MPI		176 A9.000	176 AL 53A 15	90	●		●	
			176 AL 55A 16			●	●	
			176 BL 53A 18(*)		●		●	
			176 BL 55A 19(*)			●	●	
			176 AL 53A 15B	90 Sporting	●		●	
			176 AL 55A 16B			●	●	
			176 AL 52C 17	90 Cabrio	2 door		●	
			176 BL 52C 20(*)				●	
1698 TD 60		176 B7.000	176 AT 53A 24	TD 60	●		●	
			176 AT 55A 25			●	●	
1698 TD 70		176 A3.000	176 CG 53A 21	TD 70	●		●	
			176 CG 55A 22			●	●	

(*) Versions for specific markets (France)

NOTE FOR "VOLUNTARY GERMAN" VERSIONS: for the 1108 SPI and 1242 SPI engines the code for the injection/ignition system electronic control unit is I.A.W. 16F.3B and I.A.W. 16F.33.

Introduction

Performance - Fuel consumption

00.0

VERSION	ELX	Sporting	Cabrio
GEARBOX	1 3 5 / 2 4 R		
Speed kph (average load) — 1	45	42	43
Speed kph (average load) — 2	82	75	79
Speed kph (average load) — 3	120	110	116
Speed kph (average load) — 4	158	145	152
Speed kph (average load) — 5	177	177	170
Speed kph (average load) — R	46	43	44
Maximum climable gradient fully laden %	38	39	38
Fuel consumption directive 80/1268/CEE (litres/100 km) — Urban cycle (A)	7,9	8,2	8,2
Fuel consumption directive 80/1268/CEE (litres/100 km) — Constant speed 90 kph (B)	5,1	5,4	5,5
Fuel consumption directive 80/1268/CEE (litres/100 km) — Constant speed 120 kph (C)	6,9	7,2	7,4
Fuel consumption directive 80/1268/CEE (litres/100 km) — Av. consumption (CCMC proposal) $\frac{A + B + C}{3}$	6,63	6,93	7,03
Fuel consumption directive 93/116/CE (litres/100 km) — **Urban**	9,3	9,7	9,8
Fuel consumption directive 93/116/CE (litres/100 km) — **Extra-urban**	5,2	5,5	5,5
Fuel consumption directive 93/116/CE (litres/100 km) — **Combined**	6,7	7,0	7,1
CO_2 exhaust emissions (g/km)	159	166	167

The fuel consumption figures in accordance with directive 80/1268/CE have been defined in the course of official tests and in accordance with procedures established by legal regulations. In particular, the bench tests measure simulated urban cycle figures whilst consumption at constant speeds of 90 and 120 kph are measured directly on a flat, dry road and in equivalent bench tests. The fuel consumption figures in accordance with directive 93/116/CE have been defined in the course of official tests and in accordance with specific procedures. In particular, the bench tests measure simulated urban cycle figures whilst the extra-urban cycle is measured both directly on a flat, dry road and in equivalent bench tests. The type of journey,traffic conditions, driving styles, atmospheric conditions, trim level/equipment/accessories, whether a roof rack is fitted, the presence of special equipment and the general state of the vehicle can lead to fuel consumption figures which differ from those obtained through the above mentioned procedures.

		ENGINE TYPE	1108 SPI	1242 SPI		1242 MPI	1372 turbo
Fuel consumption directive 80/1268/CEE (*) (litres/100 km)		Urban cycle (A)	7,9(7,2●) (7■)	7,5(7,2●) (7,5▲)	(*) 8 (7,7●)	7,8	9,4
		Constant speed 90 kph (B)	4,7(4,3●) (5■)	4,8(4,4●) (5,5▲)	(*) 5,4(5,1●)	5,3	5,7
		Constant speed 120 kph (C)	6,5(6,1●) (6,9■)	6,4(6,2●) (7,4▲)	(*) 7,2 (7●)	6,9	7,8
		Average consumption (CCMC proposal) $\frac{A + B + C}{3}$	6,4(5,9●) (6,3■)	6,2 (6●) (6,8▲)	(*) 6,9(6,6●)	6,7	7,6
Fuel consumption directive 93/116/CE (litres/100 km)		**Urban**	8,9(8,2●) (8,6■)	9,1(8,8●) (8,9▲)	(*) 9,7(9,1●)	9,5	11,7
		Extra-urban	5 (4,8●) (5,4■)	5,4(5,2●) (5,8▲)	(*) 5,6(5,3●)	5,6	6,4
		Combined	6,5 (6●) (6,6■)	6,8(6,5●) (6,9▲)	(*) 7,1(6,7●)	7,1	8,4
CO_2 exhaust emissions (g/km)			153(143●) (156■)	161(154●) (164▲)	(*) 169(159●)	167	199

(●) Versions for specific markets (France)
(■) Version with 6 speed gearbox
(▲) Version with automatic transmission
(*) Version with Cabrio trim level

ENGINE TYPE		1581 MPI			1698 TD 60	1698 TD 70
Fuel consumption directive 80/1268/CEE (*) (litres/100 km)	Urban cycle (A)	9,5(9,4●)	(*) 10,1(10●)	(**) 9,8	7,3	6,9
	Constant speed 90 kph (B)	6 (5,8●)	(*) 6,5(6,3●)	(**) 6	4,6	4,5
	Constant speed 120 kph (C)	8 (7,5●)	(*) 8,6(8,1●)	(**) 8	6,7	6,4
	Average consumption (CCMC proposal) $\frac{A + B + C}{3}$	7,8(7,6●)	(*) 8,4(8,1●)	(**) 8	6,2	5,9
Fuel consumption directive 93/116/CE (litres/100 km)	**Urban**	11,5 (10,3●)	(*) 11,9(11,7●)	(**) 11,8	8,9	8,4
	Extra-urban	6,3 (5,8●)	(*) 6,6(6,3●)	(**) 6,3	5,1	4,9
	Combined	8,2 (7,5●)	(*) 8,5(8,3●)	(**) 8,3	6,5	6,2
CO_2 exhaust emissions (g/km)		195 (178●)	(*) 203(197●)	(**) 197	173	164

(●) Versions for specific markets (France)
(*) Version with Cabrio trim level
(**) Version with Sporting trim level

WEIGHTS (in kg)	VERSION	ELX 3 door	ELX 5 door	Sporting
		900	915	910
+ 450 = 100		1390	1405	1400
Maximum permissible loads on the axles ■		750		
		750		
Maximum load on the tow hook (trailer with braking system)		75		
	Without braking system	400		
	With braking system	1000		

WEIGHTS (in kg)	VERSION	CABRIO
		1015
+ 360 = 80		1395
Maximum permissible loads on the axles ■		820
		700
Maximum load on the tow hook (trailer with braking system)		70
	Without braking system	400
	With braking system	1000

■ Loads which must never be exceeded

NOTE FOR VERSIONS WITH ACCESSORIES: *In the presence of special equipment (non standard air conditioner, sun roof, trailer towing device), the empty weight increases and therefore the carrying capacity may decrease, in relation to the maximum permissible loads.*

Capacities	Unit	Quantity dm³(l)	Quantity (kg)
Petrol ⩾ O.R. 95 (●)		47	–
50% + H_2O (▲) Paraflu FIAT 11	Total capacity of cooling system	4,5	–
VS MAX	Total capacity	3,1	2,75
	Partial capacity (periodic replacement)	2,8	2,5
a = TUTELA ZC/SINTH	a	2,37	2,15
a = TUTELA GI/A	a	–	0,65
b = K 854	b	–	0,126
c = TUTELA MRM2	c	–	0,080
TUTELA TOP 4 (270°C)	Total capacity – without ABS	0,4	–
	Total capacity – with ABS	0,5	–
+ AREXONS	~ - 10°C 50%; ~ - 20°C 100%; 3%	2,5	–

(▲) Distilled water

(●) Only unleaded petrol should be used

Introduction

Characteristics of Fiat Lubricant products

00.0

Name of product	Description International designation	Application
VS MAX SAE 15 W/40	Mineral based multigrade engine oil. Exceeds specifications API SG, CCMC-G4 and UNI 20153	Temperature - 15°C ÷ 40°C
TUTELA ZC 75 SYNTH	SAE 75W EP oil. Satisfies standards MIL-L-2105 and API GL4	Manual gearboxes and differentials
TUTELA GI/A	"DEXRON II" oil for automatic transmissions	Automatic gearboxes Power assisted steering
TUTELA TOP 4 (270 °C)	Synthetic fluid, F.M.V.S.S. n° 116 DOT 4 ISO 4925, CUNA NC 956-01	Hydraulic brakes and hyd. op. clutches
K 854	Lithium soap based grease, consistency NLGI = 000, containing molybdenum disulphide	Rack and pinion steering boxes
TUTELA MRM2	Water-repellant lithium soap based grease with molybdenum disulphide, consistency NLGI = 2	Constant velocity joints
Arexons DP1	Mix. of alcohol, H20 & surf. act. agents CUNA NC 956-11	To be used neat or diluted in windscreen washer systems
Paraflu[11]	Mono-ethylene glycol based anti-freeze for cooling system, CUNA NC 596 - 16	Cooling circuits Percentage to be used 50% up to - 35°C

CHARACTERISTICS

Cycle		OTTO 4 stroke
Timing		twin overhead cam
Type of fuel system		Weber-Marelli I.A.W. M.P.I. integrated electronic injection/ignition
Number of cylinders		4
Cylinder liner (bore)	mm	70,80
Stroke	mm	78,86
Capacity	cc	1242
Compression ratio		10,2
Max power CEE	kW (CV)	63 (86)
	rpm	6000
Max torque CEE	daNm (kgm)	11,3 (11,5)
	rpm	4500

00.10

TYPICAL CURVES

The power curve illustrated can be obtained with the engine overhauled and run in, without a fan, with a silencer and air filter fitted, at sea level.

1242 16V

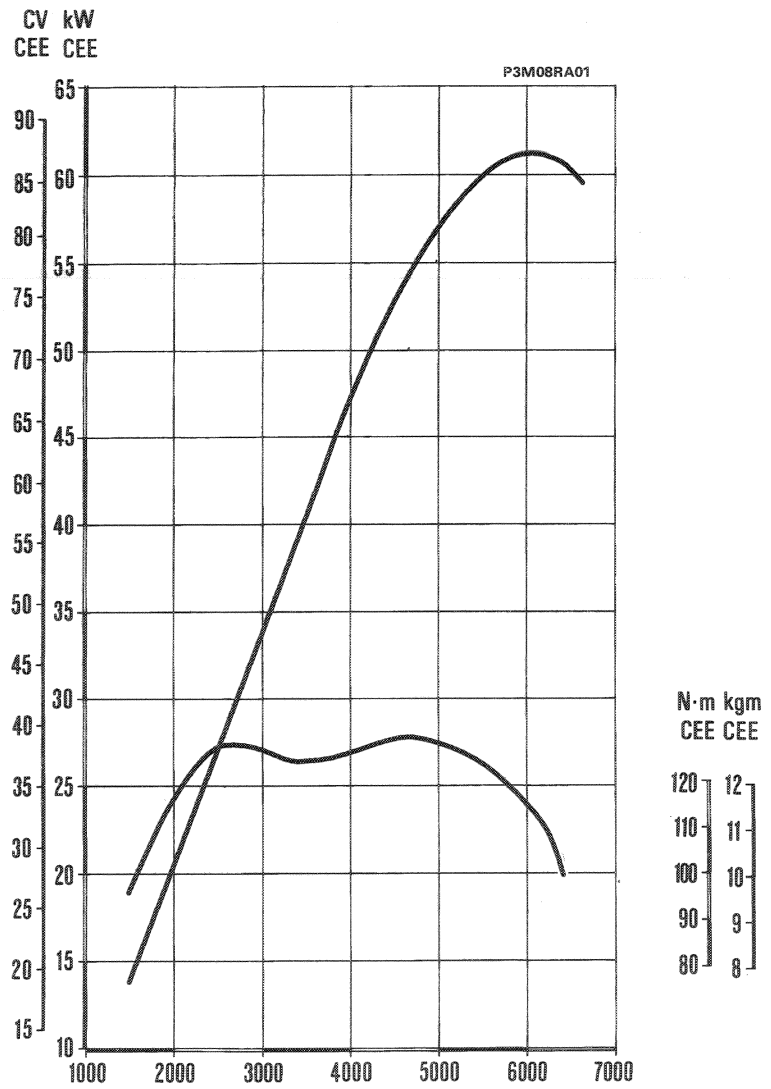

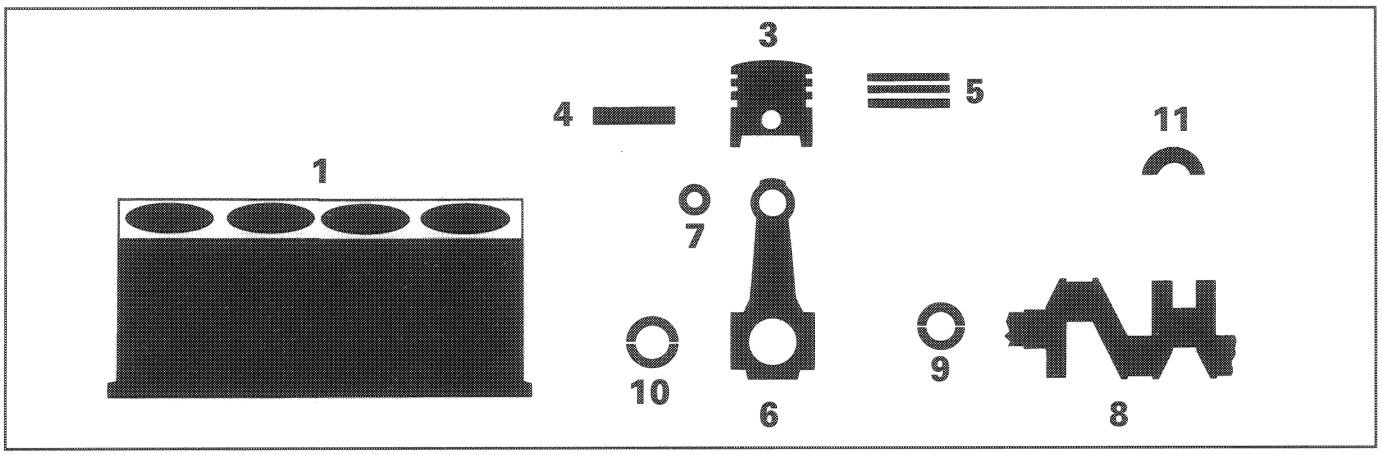

DESCRIPTION		1242 16V Values in mm
1 Main bearing supports	L	19,14÷19,20
	1	51,705÷51,709
	2	51,709÷51,713
	3	51,713÷51,717
1 Cylinder bore	A	70,800÷70,810
	B	70,810÷70,820
	C	70,820÷70,830
3 Piston	X	6
	A	70,760÷70,770
	B	70,770÷70,780
	C	70,780÷70,790
	FIAT >	0,4
3 Difference in weight between pistons		± 5 g
3-1 Piston Cylinder bore	A, B, C	0,030 ÷ 0,050

DESCRIPTION			1242 16V Values in mm
3	Gudgeon pin housing	Ø	17,982 ÷ 17,986
4	Gudgeon pin	Ø	17,970 ÷ 17,974
		Ø FIAT >	0,2
4-3	Gudgeon pin - Housing		0,008 ÷ 0,016
3	Piston ring grooves	1	1,190 ÷ 1,230
		2	1,190 ÷ 1,230
		3	2,490 ÷ 2,530
5	Piston rings	L 1	1,170 ÷ 1,190
		L 2	1,175 ÷ 1,190
		L 3	2,475 ÷ 2,490
		Ø FIAT >	0,4
5-3	Piston rings Piston ring grooves	1	0 ÷ 0,06
		2	0 ÷ 0,055
		3	0 ÷ 0,055
5-1	Opening at end of piston rings in cylinder bore	1	0,200 ÷ 0,400
		2	0,250 ÷ 0,450
		3	0,200 ÷ 0,450
6	Small end bush or pin housing	$Ø_1$	17,939÷17,956
	Big end bearing housing	$Ø_2$	45,128÷45,138

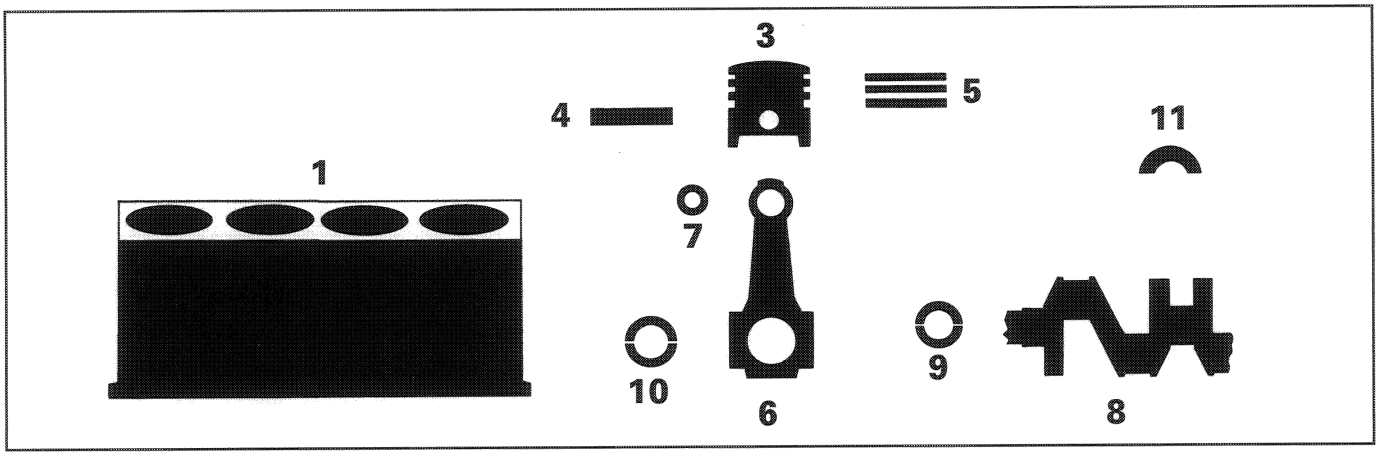

DESCRIPTION			1242 16V Values in mm
4-6	Gudgeon pin Small end		0,014 ÷ 0,035
8	Main journals Ø1	1	47,982÷47,988
		2	47,988÷47,994
		3	47,994÷48,000
	Crank pins Ø2	A	41,990÷42,008
		B	–
		C	–
		L1	23,975÷24,025
9	Crankshaft bearings L	1	1,836 ÷ 1,840
		2	1,843 ÷ 1,847
		3	1,848 ÷ 1,852
	Ø FIAT <		0,254 ÷ 0,508
9-8	Crankshaft bearings - Main journals		0,025 ÷ 0,040
10	Big end bearings	L	1,544 ÷ 1,548
	Ø FIAT <		0,254 ÷ 0,508

DESCRIPTION				1242 16V Values in mm
10-8		Big end bearings - Main journals	A	0,024 ÷ 0,060
			B	–
			C	–
11	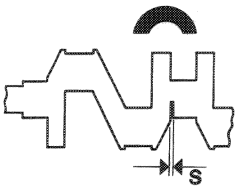	Thrust washers	S	2,310 ÷ 2,360
		S FIAT A >		0,127
11-8		Crankshaft end float		0,055 ÷ 0,265

Diagram showing connecting rod- piston assembly and direction of rotation in engine

3. Area where number of cylinder bore to which connecting rod belongs is stamped
4. Direction of engine rotation
   (The arrow shows the direction of rotation of the engine as seen from the timing side)

Value (in mm) of offset between connecting rod axis and piston axis

D= 0,85 ÷ 1,15

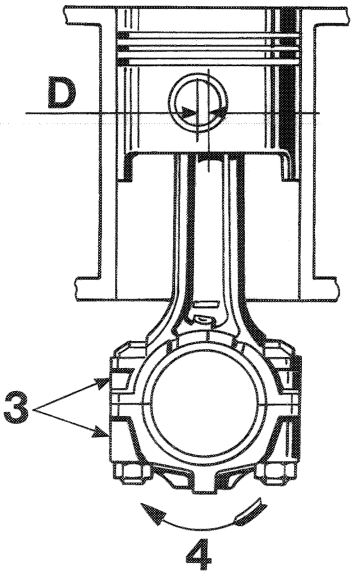

P3M12RA01

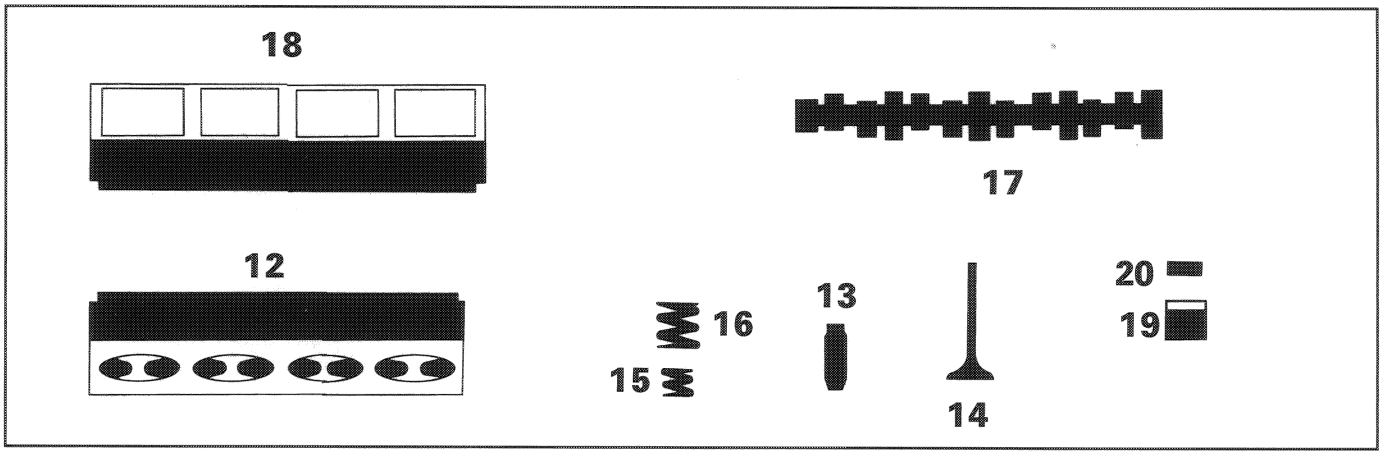

1242 16V

DESCRIPTION			Values in mm
12	Valve guide bore in cylinder head	⌀	9,959 ÷ 9,989
	Valve bore	α	45° ± 20′
			45° ± 20′
		L	1,5
	Volume of combustion chamber in cylinder head	cm^3	12,28
13	Valve guide	$⌀_1$	6,022 ÷ 6,040
		$⌀_2$	10,010 ÷ 10,030
		$⌀_2$ FIAT >	–
13-12	Valve guide Bore in cylinder head		0,049 ÷ 0,051

DESCRIPTION			1242 16V Values in mm
14	Valve	Ø1	5,974 ÷ 5,992
		Ø2	22,250 ÷ 22,550
		α	–
		Ø1	5,974 ÷ 5,992
		Ø2	22,250 ÷ 22,550
		α	–
14-13	Valve Valve guide		0,030 ÷ 0,066
15	Internal valve spring	P1	7,36 ÷ 8,34 daN
		H1	27
		P2	19,9 ÷ 21,9 daN
		H2	19
16	External valve spring	P1	14,7 ÷ 16,7 daN
		H1	31
		P2	27,9 ÷ 30,9 daN
		H2	23
17	Camshaft bearings	Ø1	35,000 ÷ 35,015
		Ø2	48,000 ÷ 48,015
		Ø3	49,000 ÷ 49,015
	Cam lift		8
			7,5
12-17	Camshaft bearings Cylinder head supports	Ø1	0,030÷0,070
		Ø2	0,030÷0,070
		Ø3	0,030÷0,070

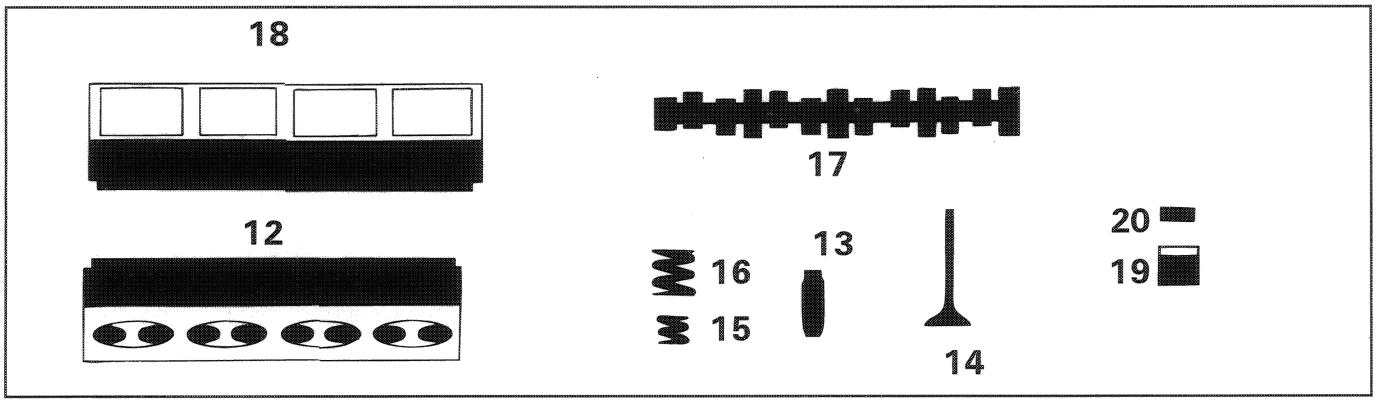

1242 16V

DESCRIPTION		Values in mm
18 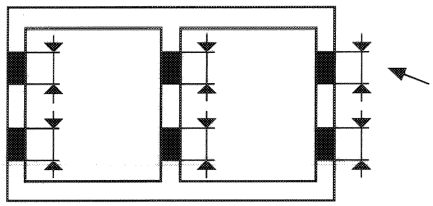 Camshaft bearings in camshaft housing	Ø1	35,045÷35,070
	Ø2	48,045÷48,070
	Ø3	49,045÷49,070
18 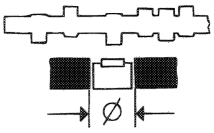	Tappet housings Ø	28,400 ÷ 28,421
19 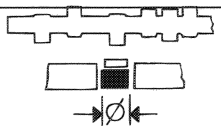	Tappet Ø	28,354÷28,370
19-18 	Tappet - Housing in camshaft housing	0,046 ÷ 0,051
17-20  clearance for timing check  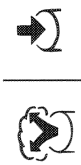		0,45
operational clearance  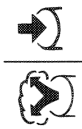		Hydraulic tappets

TIMING DIAGRAMS

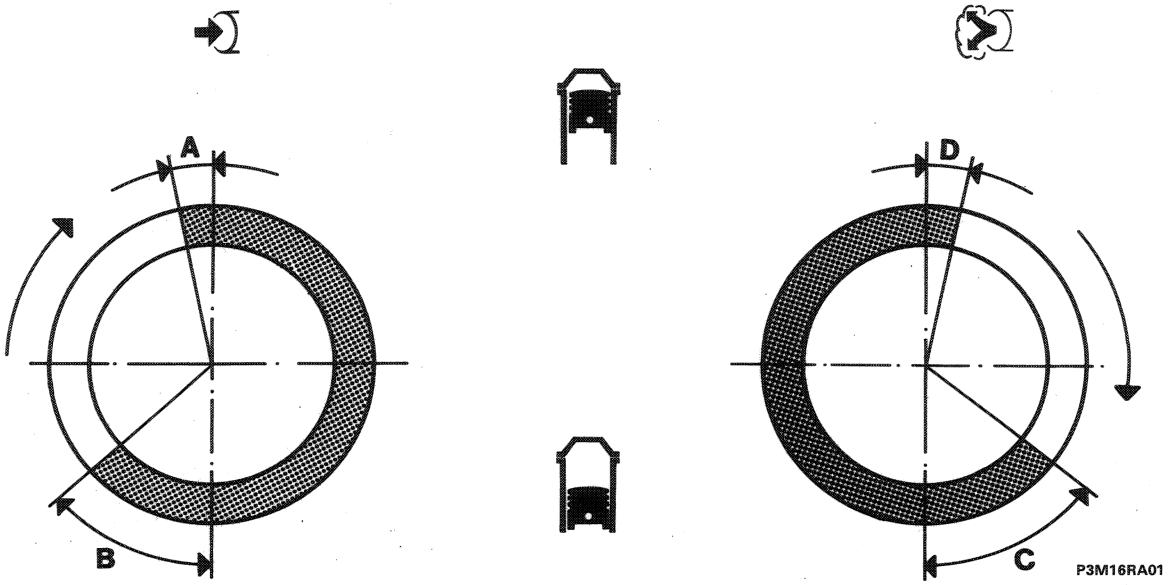

TIMING ANGLES

A	Inlet	opens BTDC	-2°
B		closes ABDC	42°
C	Exhaust	opens BBDC	26°
D		closes ATDC	6°

	1242 16V
LUBRICATION	Values in mm
Engine lubrication system	forced via, via lobe gear pump with cartridge filter in series
Oil pump	lobe gears
Pump operated	through crankshaft
Oil pressure relief valve	incorporated in crankshaft front cover
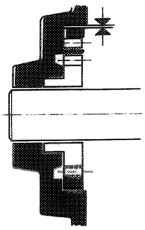 between pump casing housing and driven gear	0,100 ÷ 0,210
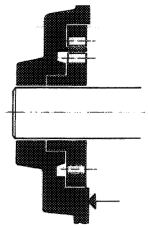 between the upper side of the gears and the pump cover	0,025 ÷ 0,070
Full flow filter	cartridge
Insufficient oil pressure sender unit	electrical
 Operating pressure at a temperature of 100°C	idling > 0,7 bar at 4000 rpm > 4 bar
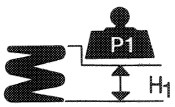 Oil pressure relief valve spring — P_1	4,54 ÷ 5,04 daN
Oil pressure relief valve spring — H_1	34,1

COOLING SYSTEM

		1242 16V
Cooling circuit		coolant circulation via centrifugal pump, radiator and two speed electrical fan operated by thermostatic switch
Water pump operation		through belt
Thermal switch to engage fan	1st stage	90° ÷ 94°C
	2nd stage	95° ÷ 99°C (■)
	1st stage	85° ÷ 89°C
	2nd stage	90° ÷ 94°C (■)
Engine coolant thermostat	opening	81° ÷ 85°C
	max opening	103°C
	valve travel	9,5 mm
Clearance between impeller vanes and pump casing		-
Pressure for checking syst. water tightness		0,98 bar
Pressure for checking exhaust valve on expansion tank cap		0,98 bar

(■) Versions with climate control

FUEL SYSTEM

Type	Weber-Marelli I.A.W. M.P.I. integrated electronic injection/ignition
Pump	electrical, immersed in tank
Capacity	⩾ 110 l/h
Fuel pressure regulator setting	3 bar

Checking idle concentration of pollutant emissions	CO (%)	HC (p.p.m.)	CO_2 (%)
Upstream of the catalytic converter	0,4 ÷ 1	⩽600	⩾ 12
Downstream of the catalytic converter	⩽0,35	⩽90	⩾ 13

ELECTRONIC INJECTION SYSTEM COMPONENTS	1242 16v
Electronic control unit	I.A.W. 18FD.5Z I.A.W. 18FD.3Z (*)
Butterfly casing	40 SXF1
Absolute pressure and air temperature sensor	TPRF03
Butterfly valve position sensor	PF 2C
Injectors	IWP045
Coolant temperature sensor	WTS 05/01
Twin relay for supplying electric pump and injection/ignition control unit	NDRS 240 103
Electric fuel pump	MSS 071
Lambda sensor	Bosch LSH 24N
Fuel filter	FI 03
Engine idle speed adjustment actuator	B 20
TDC and rpm sensor	M. Marelli CVM 01 Bosch DG 6
Fuel vapour solenoid valve	EC 1
Fuel pressure regulator	RPM 40

(*) Voluntary for Germany

Technical data
Clutch
00.18

		ELX	Sporting	Cabrio
		Values in mm		
Type		dry, single plate with bearing		
Operating mechanism		diaphragm spring		
Spring loading	daN	400		
Driven disc	$\varnothing_1$	190		
	$\varnothing_2$	134		
Distance between pedal in end of travel position and rest position		140 ± 5		
Clutch release		mechanical		

		ELX	Sporting	Cabrio
GEARBOX		1 3 5 / 2 4 R		
Synchronizers	spring ring (Porsche type)	-		
	baulk ring type	1 3 5 / 2 4		
Gears	straight toothed	R		
	helical toothed	1 3 5 / 2 4		
Gear ratios	1	3,909		
	2	2,157		
	3	1,480		
	4	1,121		
	5	0,897		
	R	3,818		

00.21-27

	ELX	Sporting	Cabrio
DIFFERENTIAL			
Ratio crown wheel & pinion reduction	3,733 (15/56)	4,071 (14/57)	3,867 (15/58)
Ratio at the wheels – 1	14,592	15,914	15,116
Ratio at the wheels – 2	8,056	8,785	8,345
Ratio at the wheels – 3	5,525	6,025	5,723
Ratio at the wheels – 4	4,185	4,564	4,335
Ratio at the wheels – 5	3,349	3,652	3,469
Ratio at the wheels – R	14,252	15,543	14,764
Differential internal casing bearing	conical roller bearings		
Adjustment of bearing pre-loading	by shims		
Thickness of shims (mm 0,10)	2,00 ÷ 3,00		
Interference to obtain exact bearing pre-loading (mm)	bearings not pre-loaded = 0.12 bearings pre-loaded (350 daN) = 0.08		
Clearance between planet/sat. gears (mm)	≤0,10		

		ELX	Sporting	Cabrio
FRONT BRAKES		Values in mm		
Disc	Ø	257		
	s	11,80 ÷ 12,10		
	s	10,55		
	s < allowed	10,20		
Brake pads	s < allowed	1,5		
Caliper	Ø	48		
Master cylinder (pump)	Ø	20,65 (13/16")		
Brake servo		Isovac 8" vacuum servo acting on all four wheels		
Distance of hydraulic piston push rod from master cylinder support plate	L	22,45 ÷ 22,65		
REAR BRAKES				
Drum	Ø	180,00 ÷ 180,25		
	Ø	180,85		
	Ø > allowed	181,35		
Shoes	s < allowed	1,5		
Wheel cylinders	Ø	20,65 (13/16")		
Reduction ratio	Pressure regulators	0,25		

STEERING	ELX Cabrio	Sporting ELX (●) Cabrio (●)
Type	rack and pinion variable ratio	rack and pinion power assisted
Ratio — no. 1f turns lock to lock	4,25	about 2.9
Ratio — rack travel	137 mm	
Turning circle (Ø)	9,7 m	
Steering angle — outer wheel α_1	33°14′	33°46′
Steering angle — inner wheel α_2	39°24′	38°02′
Steering column	with 2 universal joints	

(●) Optional

WHEEL GEOMETRY

		ELX Cabrio	Sporting
		unladen car (*)	
Front suspension	camber (**)	- 0° 25′ ± 30′	- 0° 50′ ± 30′
	caster (**)	1° 30′ ± 30′ 2° 50′ ± 30′ (●)	2° 50′ ± 30′
	toe in	0 ± 1	
	front wheel offset ▲	0°	
Rear suspension	camber (**)	0° 25′ ± 30′	- 0° 35′ ± 30′
	toe in (**)	1 ± 2	2,2 ± 2
	rear wheel thrust angle ▲	0°	

(*) Unladen car, with tyres inflated to the correct pressure and vehicle in running order
(**) Angles cannot be adjusted
(▲) Angular values which cannot be adjusted, used for the correct alignment of the vehicle
(●) Version with power assisted steering

WHEEL RIMS AND TYRES

Version	Wheel rim in pressed steel, type	* Tubeless, radial tyre type	Inflation pressure			
			Front		Rear	
			average load	heavy load	average load	heavy load
ELX Cabrio	5 J x 14"	165/65 R 14" (78T) 175/60 R 14" (78T)	2 bar	2,2 bar	1,9 bar	2,2 bar
Sporting	5 1/2 J x 14"	185/55 R 14" (79H)	2 bar	2,2 bar	1,9 bar	2,2 bar
Spare wheel	4.0 B x 14"	135/80 B 14"	2,8 bar			

NOTE *The use of the spare wheel should be limited to the distance required to reach a service stage for repairs. do not exceed a speed of 80 kph.*

* Air chambers should not be used with tubeless tyres.

Front suspension independent, Mac Pherson type with track control arms connected by two flexible bushes to a cross member.
Offset coil springs and double acting hydraulic shock absorbers.
For-life joints.
Stabilizer bar - Rubber buffers.

Coil springs

			ELX	Sporting	Cabrio
Diameter of wire		mm	11,5±0,1	12,9±0,1	11,5±0,1
Number of turns			4,25	3,25	4,25
Direction of coil			clockwise		
Height of spring released		mm	380 (389*)	310	389 (399*)
Height of spring under a load of:	275 ± 10 daN	mm	210,5	-	-
	290 ± 10 daN	mm	(210,5*)	-	210,5
	300 ± 10 daN	mm	-	195,5	-
	322 ± 10 daN	mm	-	-	(200*)
The springs are subdivided into two categories, identifiable by a mark					
yellow (1) for those under a load of:	275 daN	height of mm	>210,5	-	-
	290 daN	height of mm	(>210,5*)	-	(>210,5*)
	300 daN	height of mm	-	>195,5	-
	322 daN	height of mm	-	-	(>200*)
green (1) for those under a load of:	275 daN	height of mm	⩽210,5	-	-
	290 daN	height of mm	-	-	⩽210,5
	300 daN	height of mm	(⩽210,5*)	⩽195,5	-
	322 daN	height of mm	-	-	(⩽200*)

(1) Springs of the same category must be fitted.
(*) Versions with air conditioning

Shock absorbers

Type:		telescopic, hydraulic double acting		
Travel (start of damping action)	mm	171		
Maximum extension	mm	466 ± 2	451,5 ± 2	466 ± 2

00.44

Rear suspension independent, coil springs.
Cast iron arms with bearings.
Stabilizer bar. Rubber buffers.

			ELX	Sporting	Cabrio
Coil springs					
Diameter of wire		mm	11,85±0,05	12,15±0,05	11,85±0,05
Number of turns			4,5	4	4,5
Direction of coil			clockwise		
Height of spring released		mm	277	254	277
Height of spring under a load of:	294 ± 10 daN	mm	185	-	185
	305 ± 11 daN	mm	-	175	-
The springs are subdivided into two categories, identifiable by a mark					
yellow (1) for those under a load of:	294 daN	height of mm	>185	-	>185
	305 daN	height of mm	-	>175	-
green (1) for those under a load of:	294 daN	height of mm	⩽185	-	⩽185
	305 daN	height of mm	-	⩽175	-

(1) Springs of the same category must be fitted.

Shock absorbers

Type: telescopic, double acting		high pressure gas		
Travel (start of damping action)	mm	87	84	87
Maximum extension	mm	299±2	293±2	299±2

	1242 16V
STARTER MOTOR	M. Marelli E 80E - 12V - 0,9 kW
ALTERNATOR	M.Marelli A115I-14V-38/65A M.Marelli A115I-14V-45/85A (●)
VOLTAGE REGULATOR	BUILT IN ELECTRONIC
BATTERY	12 V - 40 Ah - 200 A 12 V - 50 Ah - 250 A (■)
IGNITION SYSTEM	ignition integrated with MPI IAW Weber Marelli ignition
IGNITION COIL	M. Marelli BAE 800 AK
SPARK PLUGS	Champion RA4HCC NGK OCPR 75

(■) For vehicles fitted with an alarm system
(●) For versions with climate control

Technical data

Electrical equipment: starting

00.55

STARTER MOTOR		1242 16V
Type		M.MARELLI E80E - 12V - 0,8 kW
Voltage	V	12
Nominal power	kW	0,8
Rotation, pinion side		clockwise
No. of poles		4
Field coil		series winding
Engagement		free wheel
Operation		solenoid
End float of armature shaft	mm	0,1 ÷ 0,4
Data for bench test		
Operating test (*):		
current	A	170
speed	rpm	1850
voltage	V	9,4
torque developed	daNm	0,42
Engagement test (*):		
current	A	330÷350
voltage	V	6,7÷7,1
torque developed	daNm	⩾ 0,9
Free running test (*):		
current	A	30÷40
voltage	V	11,5
speed	rpm	⩾ 7500
Relay		
Winding resistance (*)	pull in Ω	0,33 ÷ 037
	hold in Ω	1,52 ÷ 1,72
Lubrication		
Internal splines and shaft bushes		VS+ SAE 10 W
Engagement sleeve and intermediate disc		TUTELA MR3

(*) Data obtained at an ambient temperature of 20°C.

NOTE *When overhauling it is not necessary to under the insulator between the commutator bars*

Wiring diagrams for starter motors

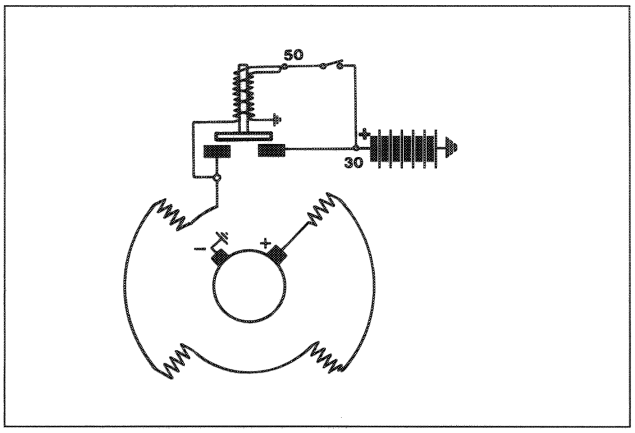

M.Marelli E80E - 12V - 0,8kW

Typical starter motor curves

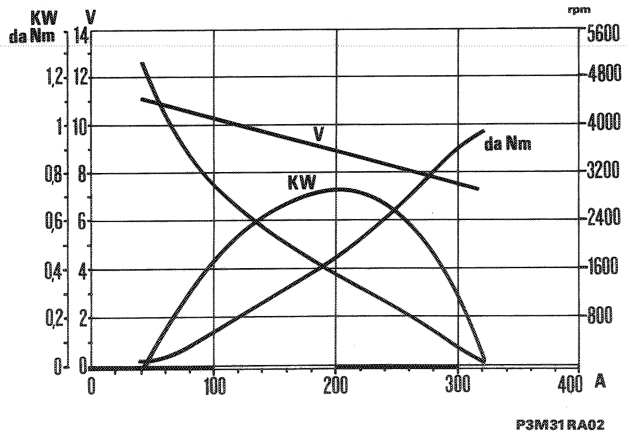

M.Marelli E80E - 12V - 0,8kW

Technical data

Electrical equipment: recharging

00.55

ALTERNATOR

		1242 16V	1242 16V (●)
Type		M. Marelli A115I-14 V-38/65A	M. Marelli A115I-14 V-45/85A
Nominal voltage	V	14	
Maximum current	A	65	85
Nominal current at 1800 rpm	A	38	50
Nominal current at 7000 rpm	A	65	85
Field winding resistance between the slip rings (*)	Ω	2,4	2,587 ÷ 2,613
Direction of rotation (seen from control side)		clockwise	
Diode rectifiers		bridge	

(*) Data obtained at an ambient temperature of 20°C.

(●) Versions with air conditioning

VOLTAGE REGULATOR

		Built in electronic
Type		RTM 151 B
Alternator speed for test	rpm	7000
Thermal stabilization current	A	-
Test current	A	-
Regulation voltage (*)	V	14,3 ÷ 14,6

(*) Data obtained at an ambient temperature of 23°C.

Alternator wiring diagrams

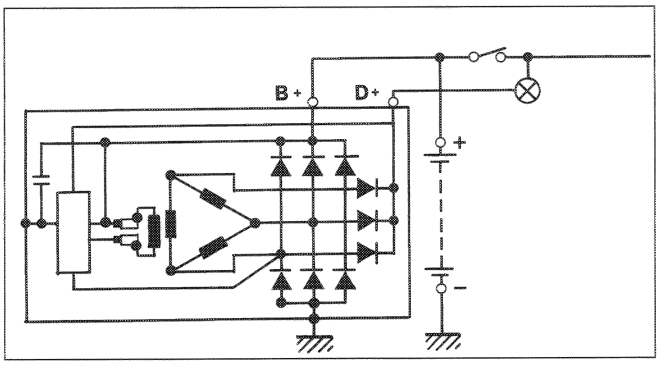

P3M33RA01

M. Marelli A115I - 14V - 38/65A

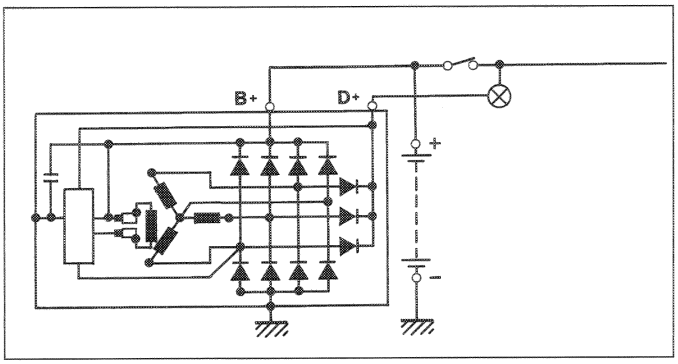

P3M33RA02

M. Marelli A115 I - 14V - 45/85A

Typical curves for voltage regulator

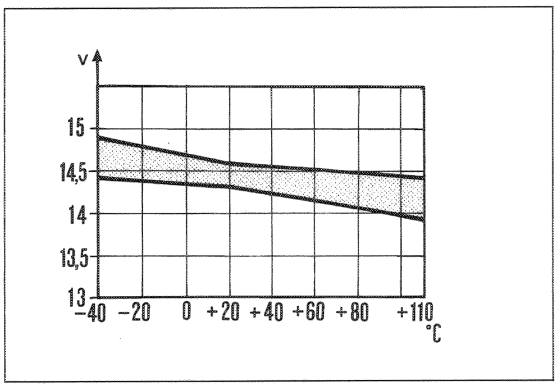

P3M33RA03

M. Marelli RTM 151 B

STATIC ADVANCE ELECTRONIC INJECTION/IGNITION

	1242 16V	
Make	M.P.I. Weber-Marelli	
Make	I.A.W. - 18FD.5Z	I.A.W. - 18FD.3Z(*)
Firing order	1 – 3 – 4 – 2	

(*) Voluntary for Germany

IGNITION COIL WITH 2 HIGH TENSION SOCKETS

Make	Cooper
Type	BAE 800 AK
Ohmic resistance of primary winding at 20°C Ω	0,495 ÷ 0,605
Ohmic resistance of secondary winding at 20°C Ω	6660 ÷ 8140

RPM AND TDC SENSOR

Make and type	Bosch 0.281.002.102
Sensor winding resistance Ω	486 ÷ 594
Distance (gap) between sensor and crankshaft pulley tooth mm	0,8 ÷ 1,5

ADVANCE ON ENGINE

With engine idling (850±50 rpm)	8° ± 3°

SPARK PLUGS

Make and type	Champion	RA4HCC
	NGK	OCPR75
Thread		M 14×1,25
Electrode gap mm		0,8 ÷ 1,0

ENGINE

1806149001 FLOWTRONIC tester for checking fuel consumption

1850193000 Spanner for spark plugs

1860183000 Pliers (⌀ 75-110) for removing and refitting piston circlips

1860313000 Drift for fitting oil seal on valve guides

1860395000 Drift for removing valve guides

1860470000 Cylinder head retaining tool during overhaul

1860490000 Valve leakage test equipment 1895868000 (to be used with 1860470000))

1860592000 Universal hook for lifting and moving engine-gearbox unit

1860700000 Band (⌀60 ÷ 125 mm) for fitting normal and oversize pistons in cylinders

1860744000 Tool for rotating crankshaft (at the bench)

1860790000 Tool for removing springs, caps, cotters and valves (to be used with 1860786000, 1860787000, 1860788000 and 1860877000)

1860815000 Adaptor for rotating crankshaft

1860831000 Spanner for timing pulley

1860834000 Spanner for camshaft housing fixing bolts

1860846000 Flywheel lock (operations at the bench)

1860877000 Tool for removing and refitting cotters, caps, springs and valves

1860879000 Universal handle

1860881000 Tool for fitting crankshaft rear cover gasket

1860942000 Goniometer for angular tightenings

1860955000 Equipment for checking fuel supply circuit

1860985000 Tools for timing and locking camshafts

1860986000 Tool for removing and fitting gudgeon pin

1860987000 Tool for tensioning timing belt

1860988000 Tool for retaining tappets

1860990000 Tool for fitting crankshaft and camshaft front cover oil seals

1860992000 Tools for positioning pistons in line

1860993000 Tool for fitting valve guide oil seals

1860994000 Tool for removing-refitting valve guides

1861001032 Bracket to secure engine (timing side) on rotating stand 1861000000

1861001034 Bracket to secure engine (flywheel side) on rotating stand 1861000000

1895615000 Tool to check piston pin unseating load (to be used with 1895884000

1895762000 Dynamometer to check V and poly-V belt tension

1895868000 Valve leakage test equipment

1895881000 Dial gauge

CLUTCH

1875086000 Guide pin for centering clutch disc

DESCRIPTION	Thread size	Tightening torque daNm	ENGINE TYPE 1242 16V
ENGINE			
Main bearing cap, bolt	M10 X 1,25	4+90°	●
Cylinder head to crankcase fixing, bolt	M9	3 +90°+90°	●
Big end fixing bolt, nut	M8	4,1	●
Flywheel to crankshaft fixing, bolt	M8	4,4	●
Drive gear to crankshaft fixing, bolt	M16 X 1,5 left (*)	2+90°	●
Camshaft driven gear and camshaft rear gears fixing, bolt	M12 X 1,25	12	●
Camshaft caps fixing, bolt	M7	1,5	●
Belt tensioner fixing, nut	M8×1,25	2,5	●
Pump coolant intake pipe fixing, bolt	M6	1	●
Plate to oil pump casing fixing, bolt	M6	0,7	●
Oil sump to crankcase fixing, bolt	M6	1	●
Oil sump to covers fixing, nut	M6	0,5	●
Alternator to crankcase fixing and adjustment, bolt	M10×1,25	5	●
Alternator to slot fixing, bolt	M10×1,25	5	●
Engine mounting fixing, bolt	M8	2,2	●
Compressor to bracket fixing, bolt	M10×1,25	5	●
Power assisted steering pump fixing, bolt	M10×1,25	5	●
Pulley to power assisted steering pump fixing, bolt	M10×1,25	5	●

(*) The bolt should not be lubricated

DESCRIPTION	Thread size	Tightening torques daNm	ENGINE TYPE 1242 16V
Spark plugs	M12×1,25	2,7	●
Oil pressure switch	M14 X 1,5	3,2	●
Coolant temperature sender unit	M16 X 1,5 tapered	3,4	●
Auxiliary shaft pulley fixing, bolt	M8	2,2	●
Rpm sensor to oil pump fixing, bolt	M6	1	●
Reinforcement between front and rear brackets fixing, bolt	M10×1,25	5	●
Alternator/compressor rear mounting to crankcase fixing, bolt	M10×1,25	5	●
Power steering mounting to crankcase fixing, bolt	M10×1,25	5	●
Power steering pump plate fixing, bolt	M8	2,2	●
Compressor tensioner fixing, bolt	M10×1,25	5	●
Compressor hinge fixing, nut	M10×1,25	5	●
Compressor to support fixing, bolt	M8	2,2	●
Alternator fixing, bolt	M10×1,25	5	●
	M10×1,25	8	
Rear tensioner to compressor fixing, bolt	M10×1,25	5	●
Rear compressor/alternator to crankcase mounting, nut	M10×1,25	5	●
Power steering shield fixing, bolt	M6	0,7	●
Tensioner/alternator fixing, bolt	M8	2,2	●
Plate to crankcase fixing, bolt	M10×1,25	5	●

DESCRIPTION	Thread size	Tightening torques daNm	ENGINE TYPE 1242 16V
Camshaft housing to cylinder head fixing, bolt	M7	1,5	●
Rear cover to camshaft housing fixing, nut	M6	0,9	●
Inlet manifold to cylinder head fixing, nut	M7	1,5	●
Exhaust manifold to cylinder head fixing, nut	M8×1,25	2,7	●
Coils to rear cover fixing, bolt	M4	0,2	●
Upper section of inlet manifold to lower section fixing, nut	M6	0,9	●
Inlet manifold fixing adjustment, bolt	M6	0,9	●
Camshaft housing to cylinder head fixing bolts introduction ducts sealing plug	M16	1,5	●
Tapered plug for sealing oil duct in camshaft housing	M14×1,5	1,5	●
Front cover fixing, nut	M6	0,9	●
Tapered plug for sealing oil duct in camshaft housing (timing side)	M20×1,5	3	●
Camshaft timing boss sealing plugs	M16×1,5	1,5	●
Belt shield to steel bushes fixing, bolts	M6	0,9	●
Plug in camshaft housing with housing for fixing resonator	M18	3	●
Resonator fixing, bolt	M8×1,25	2,5	●
Cable passage fixing, bolts	M6	0,9	●
Heat shield fixing, nuts	M6	0,9	●

DESCRIPTION	Thread size	Tightening torques daNm	ENGINE TYPE 1242 16V

ENGINE EXHAUST

Exhaust manifold fixing, nut	M8	3	●
Bracket under cross member fixing, bolt	M8	2,7	●
Front section of exhaust pipe to catalytic silencer fixing, nut	M8	2,4	●
Front section to rear section of exhaust pipe fixing, nut	M10×1,25	4	●
Rear bracket to cross member fixing, bolt	M8	2,7	●

POWER UNIT MOUNTING

Bracket to flexible mounting fixing, bolt (engine side)	M8	3,2	●
Bracket to side member fixing, bolt (engine side)	M10×1,25	5	●
Support to engine fixing, nut	M10×1,25	6	●
Support to engine fixing, bolt with unlosable, tapered washer	M10×1,25	5	●
Support to engine fixing, nut	M8	3	●
Flexible mounting to engine support fixing, nut	M10×1,25	5	●
Mounting and complete bracket to side member fixing, bolt (engine side)	M10×1,25	5	●
Flexible mounting to side member fixing, bolt (gearbox side)	M10×1,25	5	●
Support to gearbox fixing, bolt	M12 X 1,25	5	●
Flexible mounting to gearbox support fixing, nut	M10 X 1,25	5	●
Flexible mounting to cross member fixing, bolt with flange (differential side)	M8	4	●
Support to gearbox fixing, nut (differential side)	M12×1,25	9	●

00.

DESCRIPTION	Thread size	Tightening torques daNm	ENGINE TYPE 1242 16V
Flexible mounting to support fixing, bolt (differential side)	M10×1,25	5	●