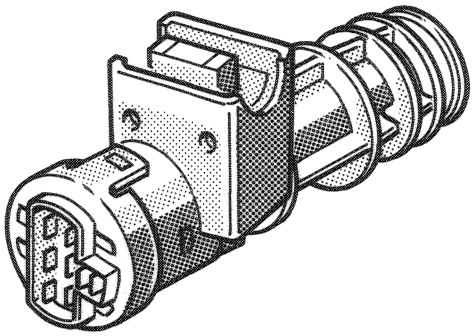

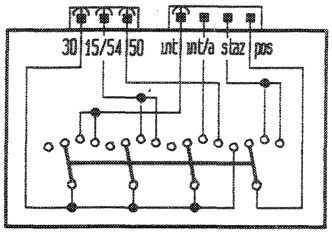

P3M401N01

Internal diagram

3. IGNITION SWITCH

Characteristics:

Maximum permissible continuous load at contacts at 13.5V:

INT/a	15 A
STAZ	5 A
POS	5 A
INT	10 A
50	30/10 A
30	30 A
15/54	5 A

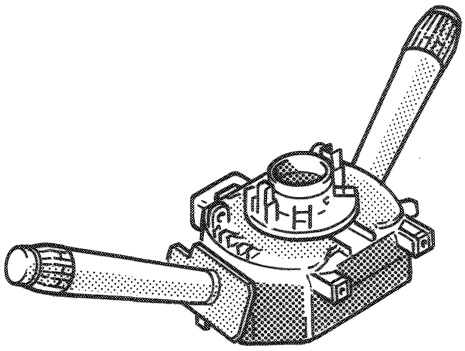

P3M401N02

4. STEERING COLUMN SWITCH UNIT

Characteristics:
Loads on

Exterior lights switch (pos. - ANA/ABB)	10±3 N
Main beam / Dipped headlamps	4÷7 N
Flasher	6÷9 N
Rearscreen wash/wipe (0 - contin.)	10±3 N
Windscreen wiper (High speed)	3÷6 N
Windscreen wiper (Int. - low - high speed)	4÷7 N
Windscreen and rearscreen washer pump	4÷7 N
Hazard w/lights switch	15±1 N

55D.

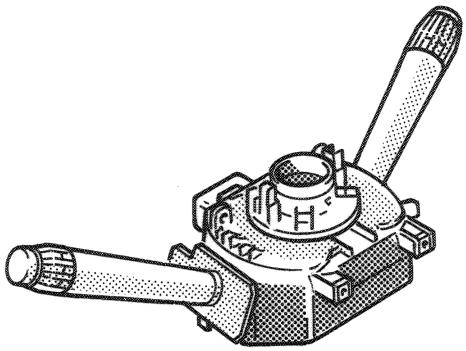

P3M401N02

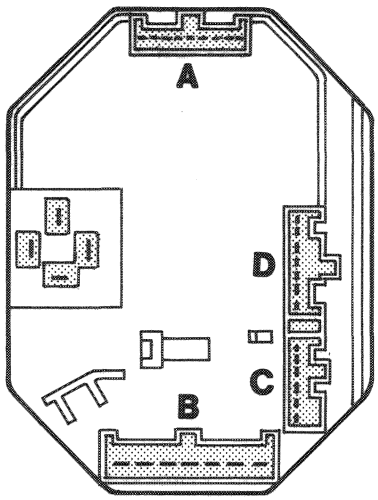

P3M402N01

4. STEERING COLUMN SWITCH UNIT

List of connecting pins:

Connector A :

Pin 1	Windscreen wiper - Brake
Pin 2	W/screen wiper - High speed
Pin 3	Cannot be used
Pin 4	Windscreen wiper - Intermittent/Low speed
Pin 5	Electric windscreen/rearscreen washer pump
Pin 6	Electric windscreen/rearscreen washer pump
Pin 7	Headlamp washer
Pin 8	Earth
Pin 9	Trailer direction indicators warning light

Connector B :

Pin 1	North European legislation
Pin 2	North European legislation
Pin 3	Dipped beam headlamps
Pin 4	Main beam headlamps
Pin 5	Int/A
Pin 6	Int
Pin 7	Side lights

Connector C :

Pin 1	Int
Pin 2	Rear fog lamps inhibitor
Pin 3	Int/A
Pin 4	Right direction indicator warning light
Pin 5	Hazard warning lights warning light (not connected)
Pin 6	Left direction indicator warning light

Connector D :

Pin 1	+ 15
Pin 2	+ 30
Pin 3	Horn
Pin 4	Cannot be used
Pin 5	Positive for windscreen/rearscreen wash/wipe
Pin 6	Rearscreen wash/wipe
Pin 7	Rearscreen wash/wipe - Brake

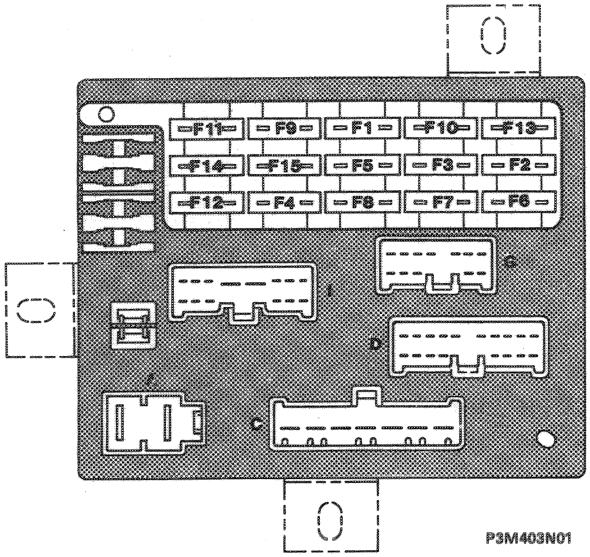

P3M403N01

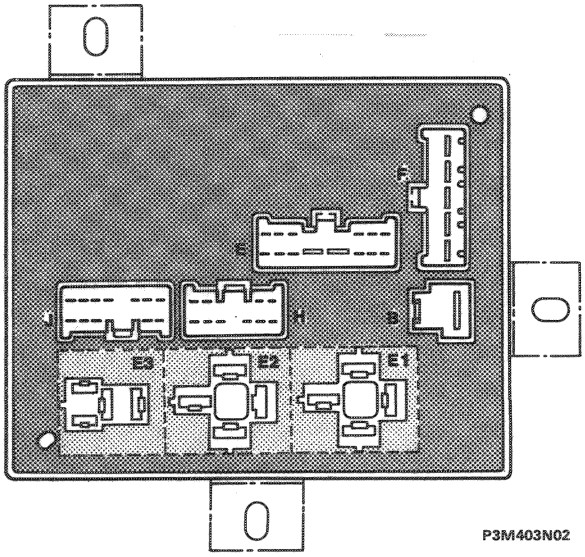

P3M403N02

7. JUNCTION UNIT

Fuse number	Fuse amperage	Fuse colour	Protected circuits
1	15 A	Blue	Hazard warning lights, brake lights, supplementary brake lights (if fitted), impulse generator for electric speedometer (if fitted), digital clock display (if fitted), direction flasher unit, instrument supply, check panel supply (if fitted), operation of electric mirrors (if fitted)
2	10 A	Red	Right front side light, left rear side light, right no. plate light, instrument light and side lights warning light, cigar lighter light, switch panel light, headlamp alignment controls light (if fitted), electric mirrors control light (if fitted), heated seat control light (if fitted)
3	10 A	Red	Left front side light, heater/air conditioner light, right rear side light, left no. plate light, digital clock display dimmer (if fitted)
4	10 A	Red	Right dipped headlamp
5	10 A	Red	Left dipped headlamp, headlamp alignment correcter (if fitted)
6	10 A	Red	Right main beam headlamp
7	10 A	Red	Left main beam headlamp, main beam headlamps warning light
8	10 A	Red	Rear fog lamps
9	10 A	Red	Hazard w/lights flasher unit
10	15 A	Blue	Courtesy light, map reading light (if fitted), luggage compartment light (if fitted), clock supply, central locking remote control supply (if fitted), radio supply, cigar lighter supply, anti-theft device blinker (if fitted)
11	20 A	Yellow	Heated rear windscreen, heated rear windscreen warning light, mirror defrosting (if fitted)
12	30 A	Green	Engine cooling fan
13	20 A	Yellow	Electric horns
14	20 A	Yellow	Windscreen wiper, rearscreen wiper, electric windscreen/rearscreen washer pump
15	20 A	Yellow	Car interior ventilation fan

Relay key:

E 1	Ignition discharge relay
E 2	Electric horn relay
E 3	Heated rear windscreen relay

3M403N

8. OPTIONAL CONTROL UNIT

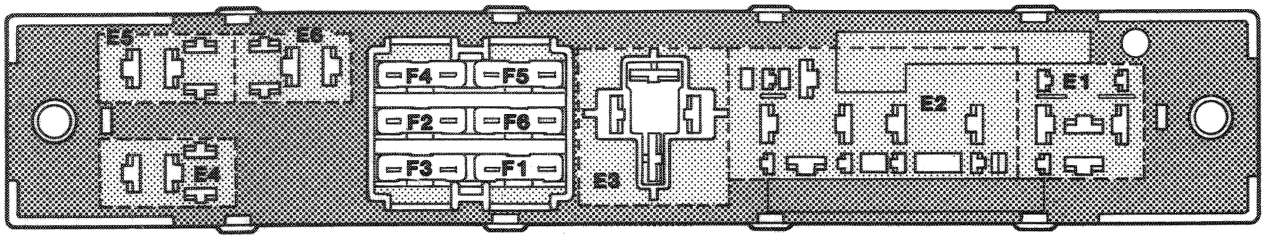

P3M404N01

Fuse number	Fuse amperage	Fuse colour	Protected circuits
1	30 A	Green	Electric front windows
2	20 A	Yellow	Fog lights
3	20 A	Yellow	Central locking
4	20 A	Yellow	Electric sun roof
5	30 A	Green	Spare
6	30 A	Green	Spare

Relay key:

E 1	Central locking control unit
E 2	Electric front windows control unit
E 3	Power relay (sun roof)
E 4	Dipped headlamps/headlamp alignment correcter relay
E 5	Fog lights relay
E 6	Rear fog lamps relay with fog lights switched on

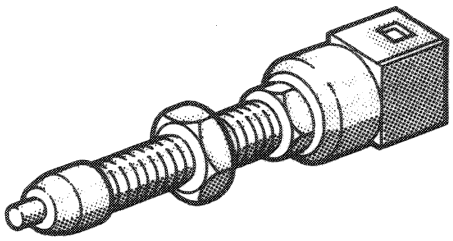

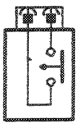

P3M404N02

Internal diagram:

20. BRAKE LIGHTS SWITCH

Characteristics :

Maximum permissible falls in voltage:

New :

Lights contact	20 mV/A
Check panel contact	500 mV/A

Used :

Lights contact	20 mV/A
Check panel contact	500 mV/A

3M404N

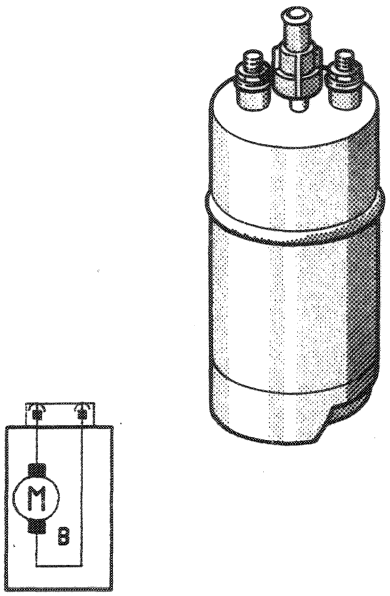

P3M405N01

Internal diagram

47B. ELECTRIC FUEL PUMP

Characteristics:

Engine :	***1108 S.P.I. - 1242 S.P.I.***
Type :	WALBRO MSS070/01
Capacity :	120 l/h
Pressure :	4 bar
Nominal voltage :	12 V
Engine :	***1242 M.P.I. - 1372 Turbo M.P.I.- 1697 T.diesel (Amendment 08) - 1697 T.diesel(USA 87)***
Type :	WALBRO MSS070/01
Capacity :	120 l/h
Pressure :	4 bar
Nominal voltage :	12 V

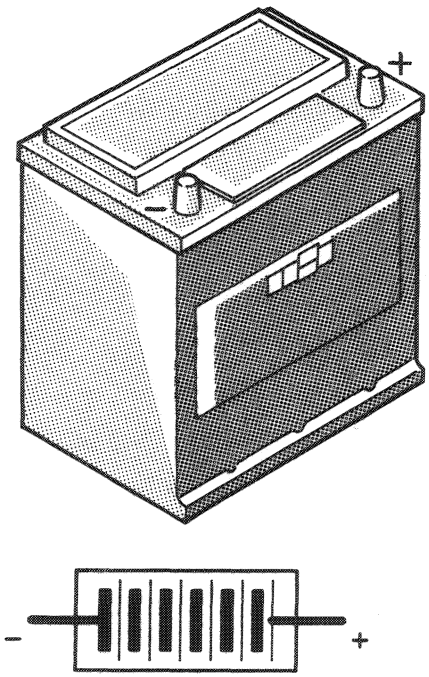

P3M405N02

Internal diagram

53. BATTERY

Engine :	***1108 S.P.I.***
Battery :	32Ah - 12V

Characteristics:

Nominal voltage :	12V
Maximum current at 18°C :	150A
Discharge after 20 hours at 20°C :	32A
Type :	
MARELLI	560150 ES
FIAMM	62069300
SCAINI	150.030
Engine :	***1242 M.P.I.***
Battery :	40Ah - 12V

Characteristics:

Nominal voltage :	12V
Maximum current at -18°C :	200A
Discharge after 20 hours at 20°C :	40A
Type :	
MARELLI	560200 ES
FIAMM	62061900
SCAINI	200.030
VARTA	81200

3M405N

55D.

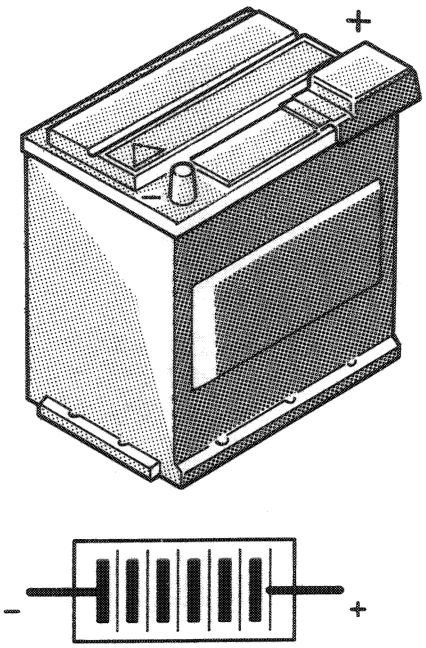

P3M406N01

Internal diagram

53. BATTERY

Engine :	***1242 S.P.I.*** ***1372 Turbo***
Battery :	50Ah - 12V

Characteristics:

Nominal voltage :	12V
Maximum current at 18°C :	250A
Discharge after 20 hours at 20°C :	50A
Type :	
MARELLI	436250 ES
FIAMM	072600
VARTA	81250

Engine :	***1697 Turbo diesel***
Battery :	60Ah - 12V

Characteristics:

Nominal voltage :	12V
Maximum current at 18°C :	380A
Dischrge aft. 20 hrs at 20°C :	60A
Type :	
MARELLI	438380 ES
VARTA	81380

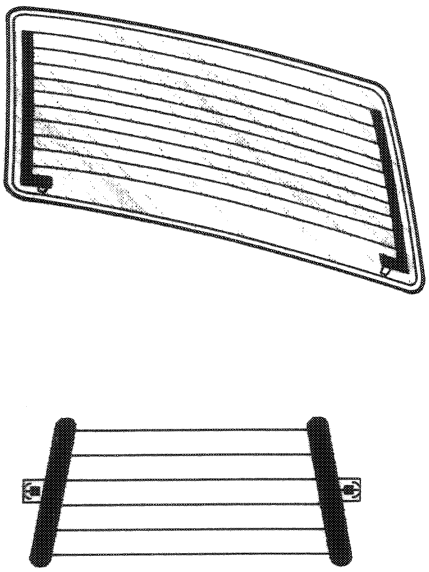

P3M406N02

Internal diagram

55. HEATED REAR WINDSCREEN

Characteristics:

Current absorption at stabilized speed at 12 V at ambient temperature of 25°C ± 5°C :	± 13A
Resistance at 25°C ± 5°C :	0,9Ω ± 20%

3M406N

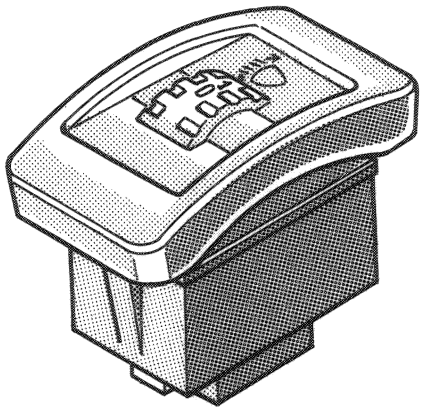

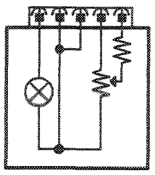

P3M407N01

Internal diagram

67. HEADLAMP ALIGNMENT UNIT

Characteristics:

Fitting load :
50 N maximum

Resistance :
390 Ω ± 2% ; 1,6 Watt

Potentiometer :
4,7 KΩ + 20% ; 0,5 Watt; 270°

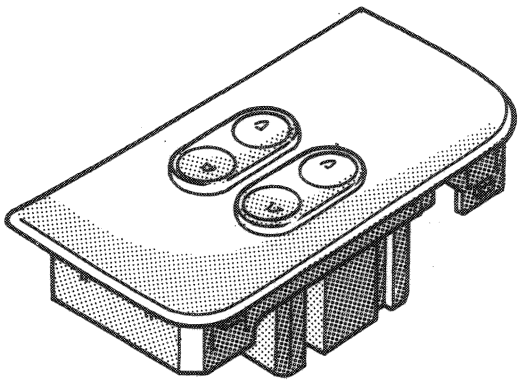

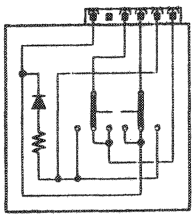

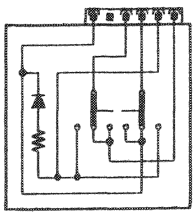

P3M407N02

Internal diagram

72 - 73. LEFT AND RIGHT FRONT ELECTRIC WINDOWS DRIVER'S SIDE CONTROL PANEL

Characteristics:

Switch extraction load :
80 N

Activating load :
6 ± 2 N

Switch time :
5 ± 2 m/s

Total switch travel :
0,8 ÷ 1 mm.

Switch travel :
0,3 ÷ 0,4 mm.

Durability test :
carry out 15000 cycles with 20A and 35000 with 7A (inductive)

3M407N

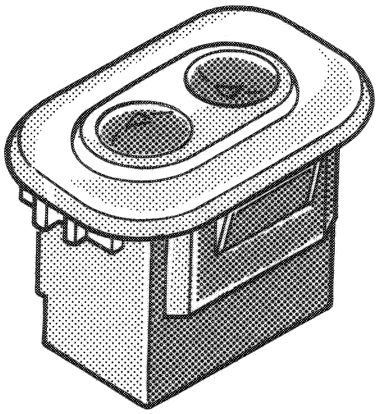

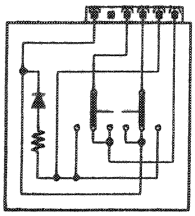

P3M408N01

Internal diagram

74. RIGHT FRONT ELECTRIC WINDOW PASSENGER SIDE CONTROL PANEL

Characteristics:

Switch extraction load :

80 N

Activating load :

6 ± 2 N

Switch time :

5 ± 2 m/s

Total switch travel :

0,8 ÷ 1 mm.

Switch travel :

0,3 ÷ 0,4 mm.

Durability test :

carry out 15000 cycles with 20A and 35000 with 7A (inductive)

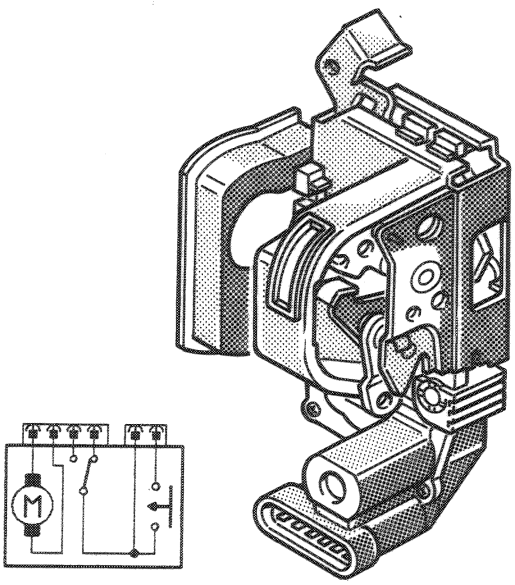

P3M408N02

Internal diagram

75 - 76. LEFT AND RIGHT FRONT CENTRAL LOCKING GEARED MOTOR AND DOOR AJAR SIGNAL

List of pins connected to:

1M	Central locking c/unit (pin 1M)
2M	Central locking c/unit (pin 2M)
2d	Central locking c/unit (pin 2)
3d	Central locking c/unit (pin 3)
4	Right dashboard earth
6	Instrument panel (doors ajar warning light "R")

Characteristics:

Absorption with lock loose :

Voltage 13.5 V	Motor locked	3,6 A

Maximum absorption (peak) :

5 A (t= 1÷2 milliseconds)

Absorption with lock fitted in door :

Voltage 12 V	Closure	12,5 A
	Opening :	12 A

3M408N

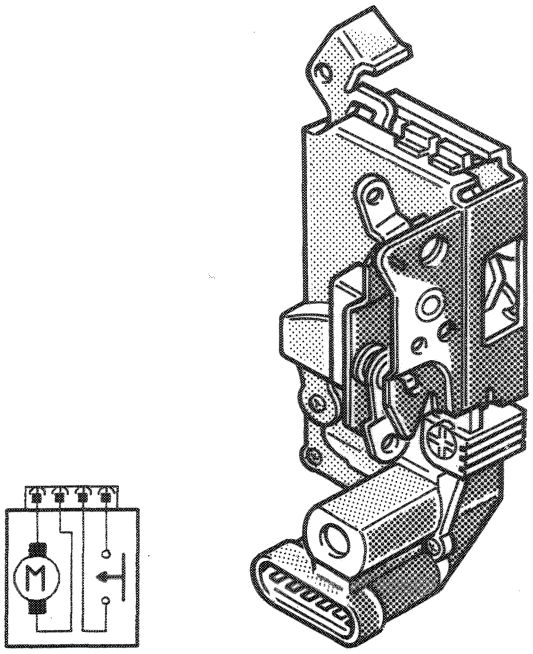

P3M409N01

Internal diagram

79 - 80. LEFT AND RIGHT REAR CENTRAL LOCKING GEARED MOTOR AND DOOR AJAR SIGNAL

List of pins connected to :

1M	Central locking control unit (pin 1M)
2M	Central locking control unit (pin 2M)
4	Right dashboard earth
6	Instrument panel (doors ajar warning light "R")

Characteristics:

Absorption with lock loose :

Voltage 13,5 V Motor locked 3,6 A

Maximum absorption (peak) :

5 A (t= 1÷2 milliseconds)

Absorption with lock fitted in door :

Voltage 12 V	Closure	12,5 A
	Opening :	12 A

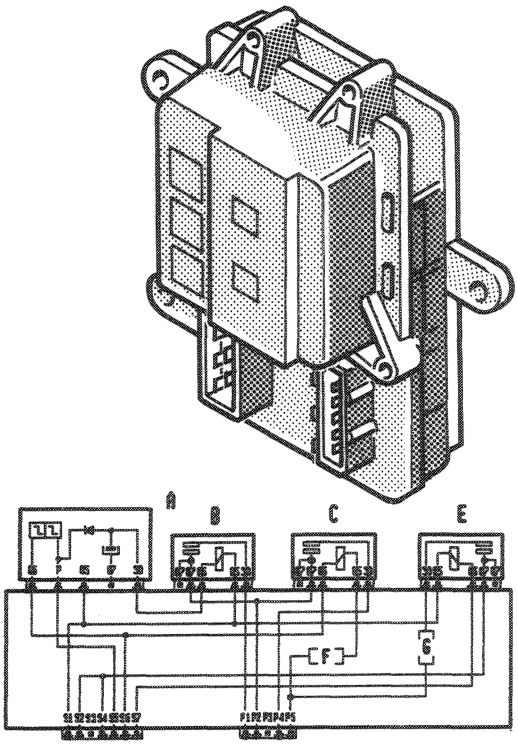

P3M409N02

Internal diagram

91. FUSE AND RELAY CONTROL BOX FOR AIR CONDITIONING

List of connecting pins (saloon version):

Connector P :

Pin 1	Engine cooling system inhibitor
Pin 2	Right front earth
Pin 3	Cannot be used
Pin 4	Engine cooling system earth
Pin 5	+ 30

Connector S :

Pin 1	+ 15
Pin 2	Compressor
Pin 3	Cannot be used
Pin 4	Nippodenso electronic control unit
Pin 5	Three stage pressure switch
Pin 6	Twin contact thermal switch
Pin 7	Signal for I.A.W. injection control unit

3M409N

55D.

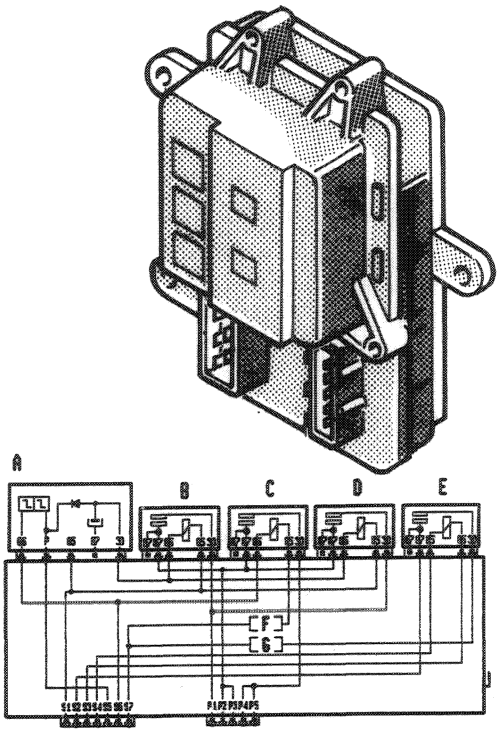

P3M410N01

Internal diagram

91. FUSE AND RELAY CONTROL BOX FOR AIR CONDITIONING

List of connecting pins (diesel version):

Connector P :

Pin 1	Engine cooling system inhibitor
Pin 2	Right front earth
Pin 3	Right front earth
Pin 4	Negative for engine cooling fan
Pin 5	Positive for engine cooling system

Connector S :

Pin 1	+ 15
Pin 2	Thermostatic switch for compressor
Pin 3	Nippodenso electronic control unit
Pin 4	Nippodenso switching off control unit
Pin 5	Three stage pressure switch
Pin 6	Twin contact thermal switch
Pin 7	+ 30

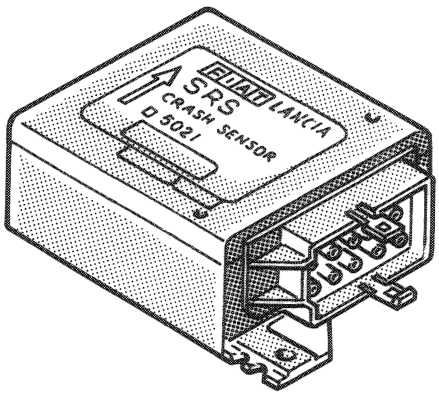

P3M410N02

110. AIR-BAG ELECTRONIC CONTROL UNIT

Characteristics:

Supplier : BECKER 5058
CONTROLLER : SAB 80C515/535
SIEMENS (with 6Mhz oscillation)

List of connecting pins :

Pin 1	Not connected (spare)
Pin 2	Air-Bag charge signal (driver's side and passenger side)
Pin 3	Air-Bag circuit failure warning light
Pin 4	Air-Bag diagnostic socket
Pin 5	Air-Bag charge (passenger side)
Pin 6	Air-Bag charge (driver's side)
Pin 7	Not connected (spare)
Pin 8	Left front earth
Pin 9	+ 15
Pin 10	Not connected (spare)

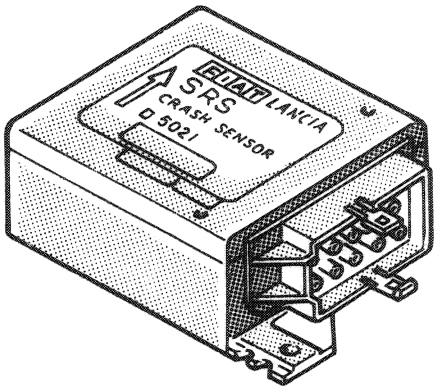

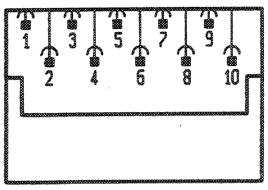

P3M411N01

110. AIR-BAG ELECTRONIC CONTROL UNIT

Pyrotechnic charge data :

Type :

TRW MESA/DYNAMIT NOBEL

Resistance :

2,15 +/- 0,35Ω

Non discharge current :

INF=0,2A + 85°C t=10sec.

Discharge current :

IAF=1A - 35°C t=3msec

Monitor current (resistance test) :

ITest=30mA= +/- 6mA

Monitor current (short circuit test) :

ITest=4....10mA

Operating characteristics :

The engagement level depends on the severity of the impact on the sensor. Implementation should occur during a head-on impact, against a fixed barrier, at a speed » 24 Km/h.

Enagement level :

The Air-Bag device should not be activated during a head-on impact, against a fixed barrier, at a speed « 15 Km/h.

Safety sensor :

To prevent poor ignition caused by defects in the electronic circuit or the wiring, the sensor is mechanically equipped with an "Earth-/Spring" type safety switch. This safety sensor is fitted between the negative pole of the injection circuit and the earth.

The pyrotechnic explosive charge in the gas generator is ignited when the following conditions occur at the same time:

1) Closure of the mechanical safety sensor, independent of the electronic circuit;
2) Exceeding the injection level and switching "on" of the electronic injection stage.

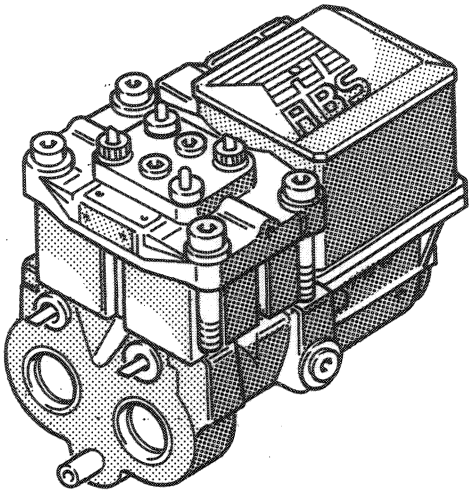

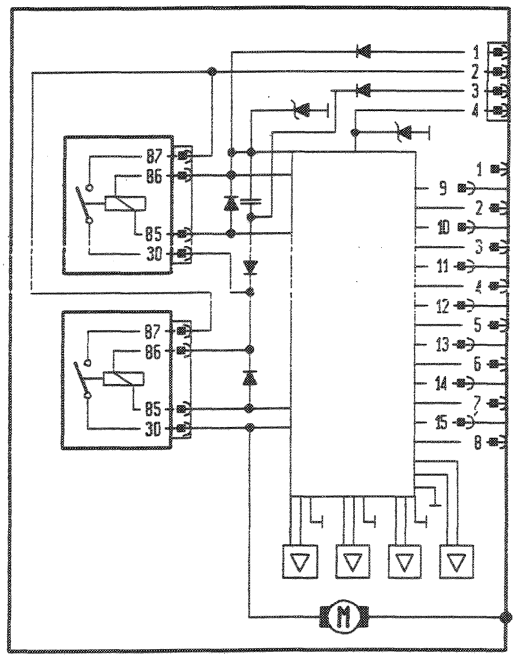

P3M412N01

Internal diagram

113. ANTI-LOCKING BRAKING SYSTEM (A.B.S.) ELECTRONIC CONTROL UNIT

Type :
BOSCH 0.265.204.009

List of connecting pins:

Pin 1	A.B.S. 10 A protective fuse
Pin 2	Battery direct positive (+30)
Pin 3	Left front earth
Pin 4	Instrument panel (A.B.S. failure warning light)

List of connecting pins:

Pin 1	Instrument panel (A.B.S. failure warning light)
Pin 2	Sensor on left rear wheel (A.B.S.)
Pin 3	Not connected - Spare
Pin 4	Sensor on left rear wheel (A.B.S.)
Pin 5	Sensor on right front wheel (A.B.S.)
Pin 6	Sensor on right rear wheel (A.B.S.)
Pin 7	Sensor on left front wheel (A.B.S.)
Pin 8	Not connected - Spare
Pin 9	Brake lights switch
Pin 10	Not connected - Spare
Pin 11	Sensor on right front wheel (A.B.S.)
Pin 12	Diagnostic socket for A.B.S.
Pin 13	Sensor on left front wheel (A.B.S.)
Pin 14	Sensor on right rear wheel (A.B.S.)
Pin 15	Diagnostic socket for A.B.S.

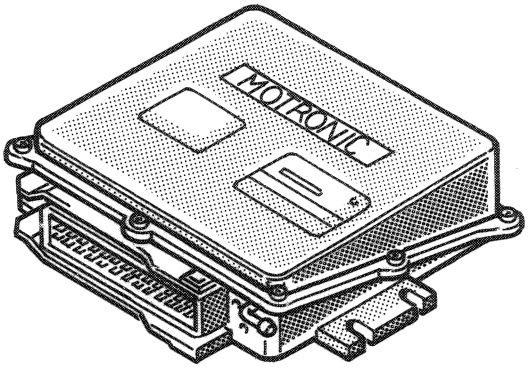

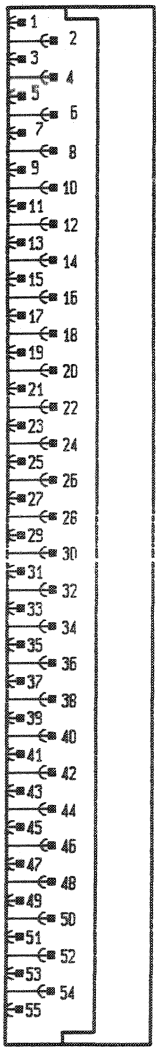

P3M413N01

Internal diagram

119. BOSCH FUEL INJECTION CONTROL UNIT (1372 Turbo i.e.)

Type :
BOSCH

List of connecting pins:

Pin 1	Power module
Pin 2	Instrument panel (Injection system failure warning light)
Pin 3	Relay for Lambda sensor, electric fuel pump
Pin 4	Idle adjustment actuator
Pin 5	Canister solenoid valve
Pin 6	Instrument panel (Rev counter)
Pin 7	Air flow meter
Pin 8	Timing sensor
Pin 9	Impulse generator for speedometer signal
Pin 10	Heated Lambda sensor
Pin 11	Detonation sensor
Pin 12	Potentiometer on butterfly valve Timing sensor Distance correcter
Pin 13	Diagnostic socket for injection system
Pin 14	Power earth
Pin 15	Not connected - Spare
Pin 16	Injectors
Pin 17	Injectors
Pin 18	Injection system 10 A protective fuse
Pin 19	Signal earth
Pin 20	Power module
Pin 21	Pierburg solenoid valve
Pin 22	Idle adjustment actuator
Pin 23	Not connected - Spare
Pin 24	Power earth
Pin 25	Air flow meter
Pin 26	Air flow meter

3M413N

55D.

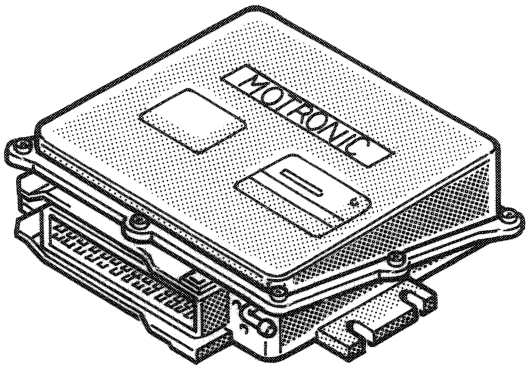

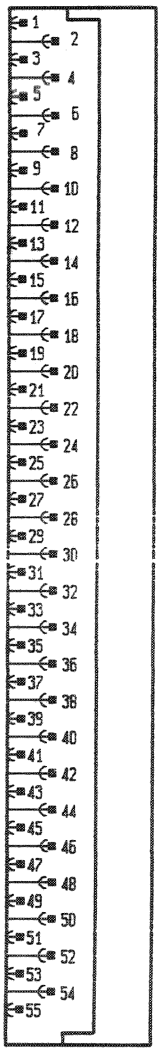

P3M413N01

Internal diagram

119. BOSCH FUEL INJECTION CONTROL UNIT (1372 Turbo i.e.)

Type :
BOSCH

List of connecting pins:

Pin 27	Ignition switch (+15)
Pin 28	Heated Lambda sensor
Pin 29	Not connected - Spare
Pin 30	Potentiometer on butterfly valve Water temperature sensor Air temperature sensor Detonation sensor Distance correcter
Pin 31	Not connected - Spare
Pin 32	Not connected - Spare
Pin 33	Not connected - Spare
Pin 34	Injectors
Pin 35	Injectors
Pin 36	Injection system relay
Pin 37	Injection system relay
Pin 38	Not connected - Spare
Pin 39	Not connected - Spare
Pin 40	Not connected - Spare
Pin 41	Not connected - Spare
Pin 42	Not connected - Spare
Pin 43	Not connected - Spare
Pin 44	Air temperature sensor
Pin 45	Water temperature sensor
Pin 46	Distance correcter
Pin 47	Rpm and T.D.C. sensor.
Pin 48	Rpm and T.D.C. sensor.
Pin 49	Not connected - Spare
Pin 50	Not connected - Spare
Pin 51	Not connected - Spare
Pin 52	Anti-theft device electronic control unit
Pin 53	Potentiometer on butterfly valve
Pin 54	Not connected - Spare
Pin 55	Diagnostic socket for injection system

3M414N

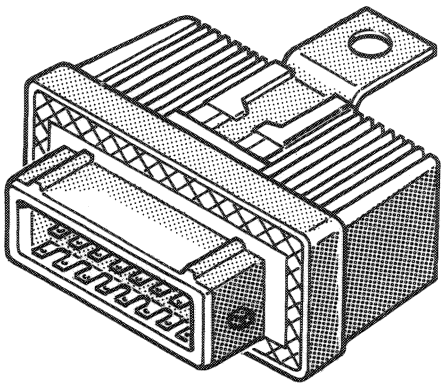

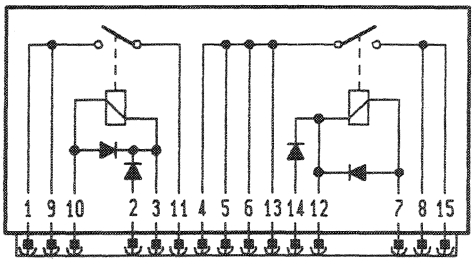

P3M415N01

Internal diagram

124. MULTIPLE RELAY

Engines : ***1108 S.P.I. - 1242 S.P.I. - 1242 M.P.I.***

Type :
WEBER DRS 240.103/00

List of connecting pins:

Pin 1	Injection/Ignition electronic control unit (Pin 35)
Pin 2	Not connected - Spare
Pin 3	Battery direct positive (+30)
Pin 4	Electric fuel pump (Version 1242 M.P.I. going to injectors)
Pin 5	Ignition coils
Pin 6	Canister solenoid valve
Pin 7	Injection/Ignition electronic control unit (Pin 23)
Pin 8	20 A protective fuse for injection electric pump (+30) (Version 1242 M.P.I. 25 A fuse)
Pin 9	Not connected - Spare
Pin 10	Injection/Ignition electronic control unit (Pin 4)
Pin 11	5 A protective fuse for injection system (+12)
Pin 12	Ignition switch (+15)
Pin 13	Injectors (Version. 1242 M.P.I. going to the electric fuel pump)
Pin 14	Not connected - Spare
Pin 15	20 A protective fuse for injection electric pump (+30) (Version 1242 M.P.I. 25 A fuse)

Characteristics:

Nominal voltage	12 V
Test voltage	13,5 V
Test temperature	23° ± 5 °C
Operating temperature	-40 °C ÷ +100 °C
Storage temperature	-40 °C ÷ +130 °C
Di-electric rigidity	1000 Veff/min.
Insulation resistance	» 10 MΩ
Duration	300000 manoeuvres

	Relay K1	Relay K2
Coil resistance	85Ω ± 10%	100Ω ± 10%
Release voltage	1 ÷ 4 V	1 ÷ 4 V
Peak load at 23° ± 5 °C	30 A	20 A

3M415N

55D.

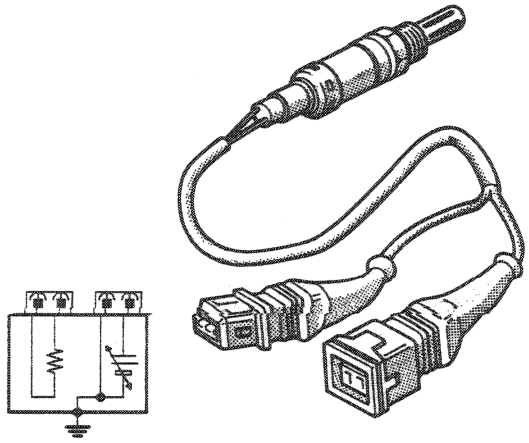

Internal diagram

P3M416N01

125. HEATED LAMBDA SENSOR

Engines : ***1108 S.P.I. - 1242 S.P.I. - 1242 M.P.I. - 1372 Turbo***

Type :
BOSCH 0.258.003.222

Characteristics:

Tightening torque	50 ÷ 60 Nm
Permissible errors without tolerance	± 0,5 mm

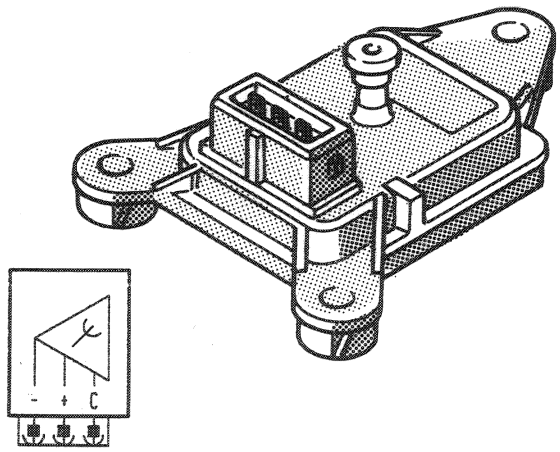

Internal diagram

P3M416N02

129. ABSOLUTE PRESSURE SENSOR

Engines : ***1108 S.P.I. - 1242 S.P.I. - 1242 M.P.I.***

Type :
M.MARELLI PRT-03/03

List of connecting pins:

+	Positive for Injection/Ignition c/unit
-	Negative for Inject/Ign control unit
C	Signal for Inject/Ign control unit

Characteristics:

Characteristics of output signal with supply voltage constant at 5 V :

- Output voltage	250 mV
- Pressure	17 KPa
- Output voltage	4750 mV
- Pressure	105 KPa

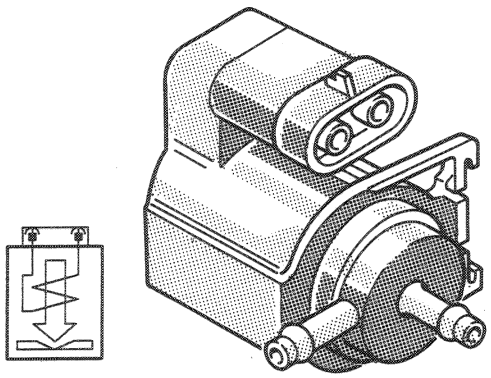

Internal diagram

P3M416N03

136. CANISTER SOLENOID VALVE

Engines : ***1108 S.P.I. - 1242 S.P.I. - 1242 M.P.I.***

Type :
WEBER

Characteristics:

Minimum resistance at 20 °C > 22,6 Ω min.

Engines : ***1372 Turbo***

Type :
BOSCH 0.280.142.150

Characteristics:

Hourly capacity
Min. 0,08 m /h ; Max. 3,0 m /h

3M416N

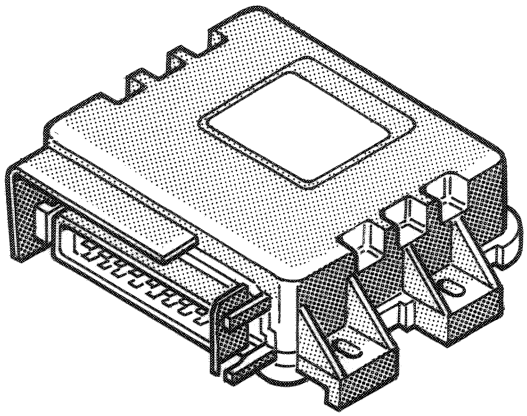

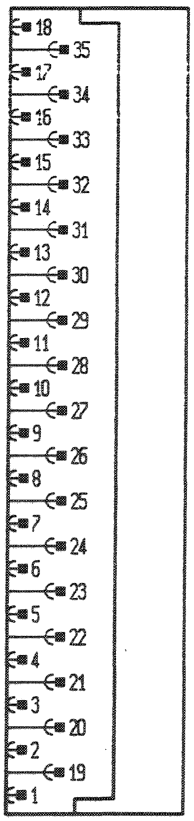

P3M417N01

Internal diagram

132. I.A.W. ELECTRONIC INJECTION AND IGNITION CONTROL UNIT

Engines : ***1108 S.P.I.***

Type :
M.MARELLI IAW 6F.S3

Engines : ***1242 S.P.I.***

Type :
M.MARELLI IAW 6F.SB

List of connecting pins:

Pin 1	Ignition coils
Pin 2	Stepping actuator
Pin 3	Stepping actuator
Pin 4	Multiple relay
Pin 5	Not connected - Spare
Pin 6	Instrument panel (Injection system failure warning light)
Pin 7	Not connected - Spare
Pin 8	Air conditioning system electronic control unit (Nippondenso)
Pin 9	Not connected - Spare
Pin 10	Diagnostic socket for injection system
Pin 11	Rpm and T.D.C. sensor.
Pin 12	Heated Lambda sensor
Pin 13	Water temperature sensor
Pin 14	Potentiometer on butterfly valve Absolute pressure sensor
Pin 15	Diagnostic socket for injection system
Pin 16	Negative for diagnostic socket for injection system
Pin 17	Earth on engine
Pin 18	Injector

3M417N

55D.

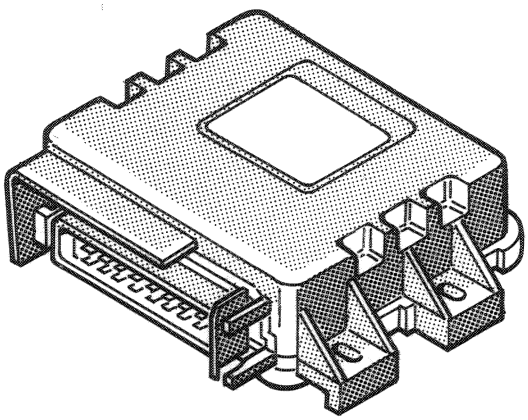

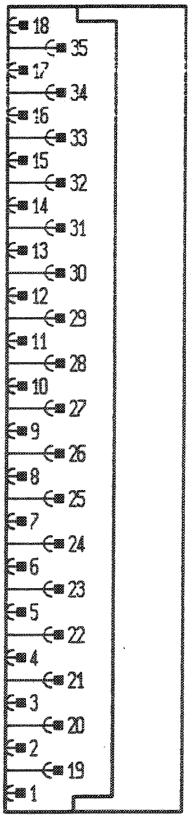

P3M417N01

Internal diagram

132. I.A.W ELECTRONIC INJECTION AND IGNITION CONTROL UNIT

Engines : ***1108 S.P.I.***

Type :
M.MARELLI IAW 6F.S3

Engines : ***1242 S.P.I.***

Type :
M.MARELLI IAW 6F.SB

List of connecting pins:

Pin 19	Ignition coils
Pin 20	Stepping actuator
Pin 21	Stepping actuator
Pin 22	Canister solenoid valve
Pin 23	Instrument panel (Rev counter) Multiple relay Anti-theft device electronic control unit
Pin 24	Fuse and relay control box for air conditioning Relay for engaging compressor coupling
Pin 25	Not connected - Spare
Pin 26	Ignition switch Multiple relay
Pin 27	Not connected - Spare
Pin 28	Rpm and T.D.C. sensor.
Pin 29	Heated Lambda sensor
Pin 30	Potentiometer on butterfly valve
Pin 31	Air temperature sensor
Pin 32	Absolute pressure sensor
Pin 33	Not connected - Spare
Pin 34	Earth on engine
Pin 35	Multiple relay

3M418N

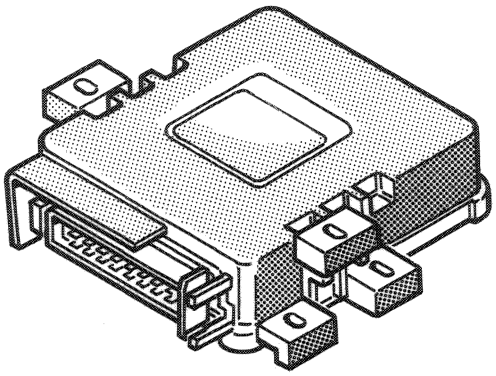

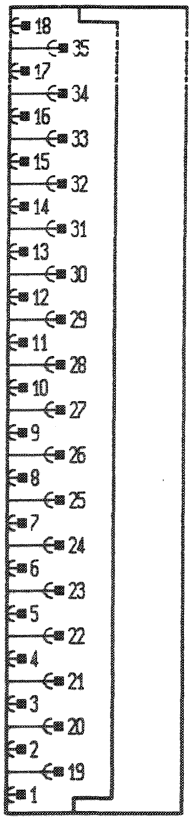

P3M419N01

Internal diagram

132. I.A.W. ELECTRONIC INJECTION AND IGNITION CONTROL UNIT

Engine : ***1242 M.P.I.***

Type :
M.MARELLI IAW 8F.5T

List of connecting pins:

Pin 1	Ignition coils
Pin 2	Stepping actuator
Pin 3	Stepping actuator
Pin 4	Multiple relay
Pin 5	Not connected - Spare
Pin 6	Instrument panel (injection system failure warning light)
Pin 7	Not connected - Spare
Pin 8	Air conditioning system electronic control unit (Nippondenso)
Pin 9	Not connected - Spare
Pin 10	Diagnostic socket for injection system
Pin 11	Rpm and T.D.C. sensor.
Pin 12	Heated Lambda sensor
Pin 13	Water temperature sensor
Pin 14	Potentiometer on butterfly valve Absolute pressure sensor
Pin 15	Diagnostic socket for injection system
Pin 16	Negative for diagnostic socket for injection system
Pin 17	Earth on engine
Pin 18	Injectors

3M419N

55D.

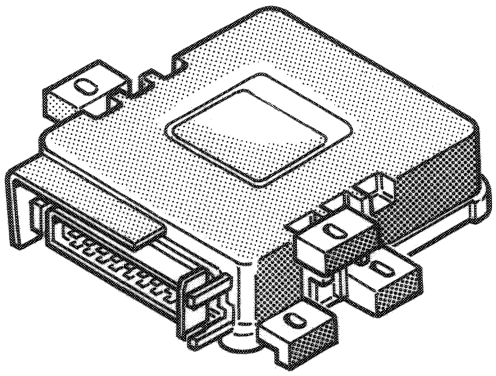

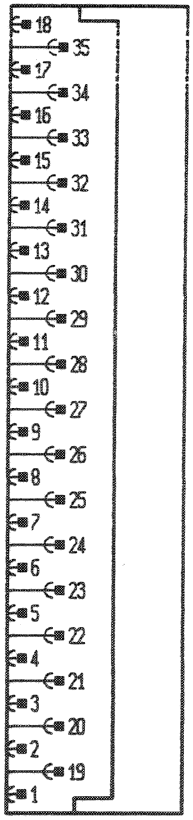

P3M419N01

Internal diagram

132. I.A.W. ELECTRONIC INJECTION AND IGNITION CONTROL UNIT

Engines : ***1242 M.P.I.***

Type :
M.MARELLI IAW 8F.5T

List of connecting pins:

Pin 19	Ignition coils
Pin 20	Stepping actuator
Pin 21	Stepping actuator
Pin 22	Canister solenoid valve
Pin 23	Instrument panel (Rev counter) Multiple relay Anti-theft device electronic control unit
Pin 24	Fuse and relay control box for air conditioning Relay for engaging compressor coupling
Pin 25	Not connected - Spare
Pin 26	Ignition switch Multiple relay
Pin 27	Not connected - Spare
Pin 28	Rpm and T.D.C. sensor.
Pin 29	Heated Lambda sensor
Pin 30	Potentiometer on butterfly valve
Pin 31	Air temperature sensor
Pin 32	Absolute pressure sensor
Pin 33	Not connected - Spare
Pin 34	Earth on engine
Pin 35	Multiple relay

3M420N

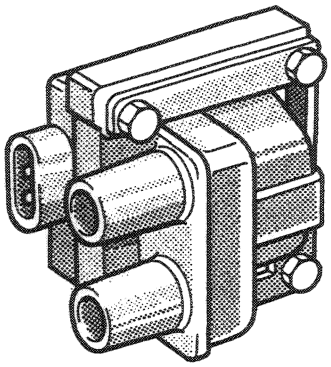

133. IGNITION COILS

Engines : ***1108 S.P.I. - 1242 S.P.I. - 1242 M.P.I.***

Type :
M.MARELLI BAE 800 AK

Characteristics:

Resistance measured at 23° ± 5° C :

Primary	550 mΩ ± 10%
Secondary	7,4 KΩ ± 10%

Inductance measured at 23° ± 5° C and a frequency of 1KHz :

Primary	3,75 mH ± 10%
Secondary	25,5 H ± 10%

Maximum continuous operating temperature at the ignition coil casing 100° C

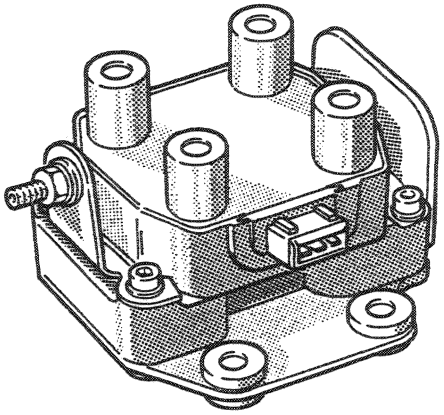

P3M421N01

Engine : ***1372 Turbo***

Type :
BOSCH 0.221.503.407

Characteristics:

Resistance measured at 23° ± 5° C :

Primary	0,5 Ω ± 10%
Secondary	13,3 KΩ ± 10%

Inductance measured at 23° ± 5° C and a frequency of 1KHz :

Primary	3,7 mH ± 10%
Secondary	38 H ± 10%

Operating temperature
-40 ÷ +120° C

Heat (Max temp for ½h) +140° C

3M421N

55D.

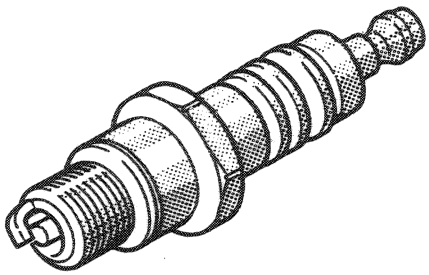

P3M422N01

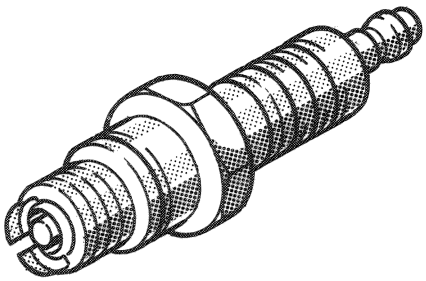

P3M422N02

134. SPARK PLUGS

Engines : ***1108 S.P.I. - 1242 M.P.I.***

Type :
CHAMPION RC9YCC

Characteristics:

Electrode gap	0,85 ÷ 0,95 mm
Resistor incorporated	5 KΩ ÷ 15 KΩ at 25° C

Engines : ***1242 S.P.I.***

Type :
CHAMPION RC9YCC

Characteristics:

Electrode gap	0,85 ÷ 0,95 mm
Resistor incorporated	5 KΩ ÷ 15 KΩ at 25° C

Type :
FIAT RICAMBI 9GYSSR

Characteristics:

Electrode gap	0,85 ÷ 0,95 mm
Resistor incorporated	5 KΩ ÷ 15 KΩ at 25° C

Engines : ***1372 Turbo***

Type :
CHAMPION RC7BYC4

Characteristics:

Electrode gap	0,8 ÷ 1 mm
Resistor incorporated	5 KΩ ÷ 15 KΩ at 25° C

Type :
FIAT RICAMBI 7GBYSR4

Characteristics:

Electrode gap	0,8 ÷ 1 mm
Resistor incorporated	5 KΩ ÷ 15 KΩ at 25° C

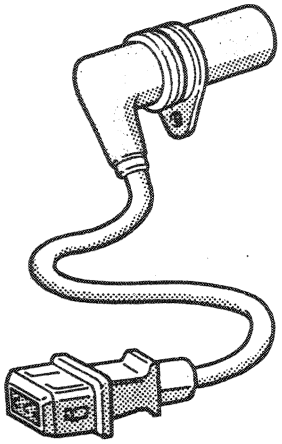

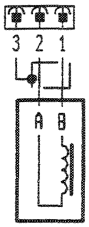

P3M423N01

Internal diagram

137. RPM AND T.D.C. SENSOR.

Engines : ***1108 S.P.I. - 1242 S.P.I. - 1242 M.P.I.***

Type :
BOSCH 0.261.210.114

Characteristics:

Gap	0,5 ÷ 1,5 mm
Dynamometric tightening	> 8 Nm
Magnetic field :	< 2 KA/m

Engines : ***1372 Turbo***

Type :
BOSCH 0.261.210.104

Characteristics:

Gap	0,8 ÷ 1,5 mm
Dynamometric tightening	> 8 Nm
Magnetic field :	< 2 KA/m

Engines : ***1697 Tds***

Type :
M.MARELLI SEN 8U

Characteristics:

Gap	0,4 ÷ 1 mm
Coil resistance	680 Ω ± 15%
Inductance	295 mH ± 10%

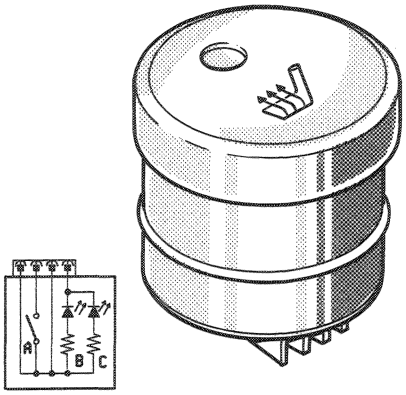

P3M423N02

Internal diagram

160. HEATED DRIVERS SEAT CONTROL UNIT

Characteristics:

Switch travel :

on	6,5 mm
on	4 mm

Activating load 8 ± 1 N

3M423N

55D.

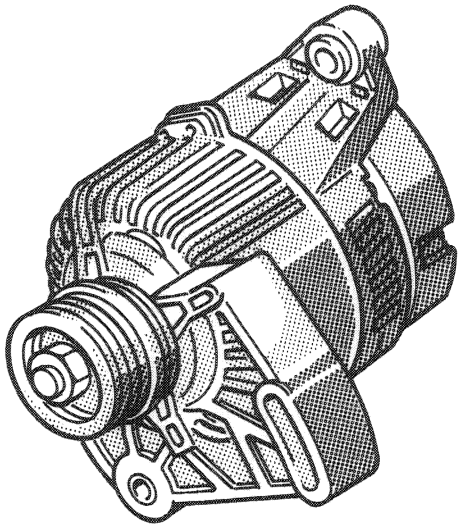

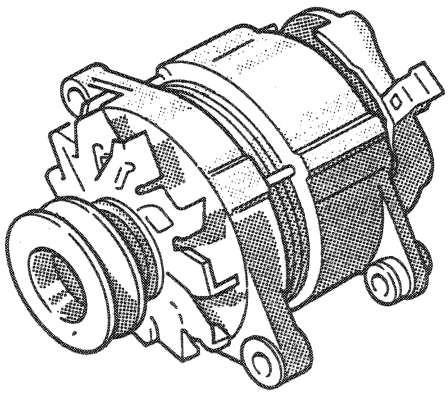

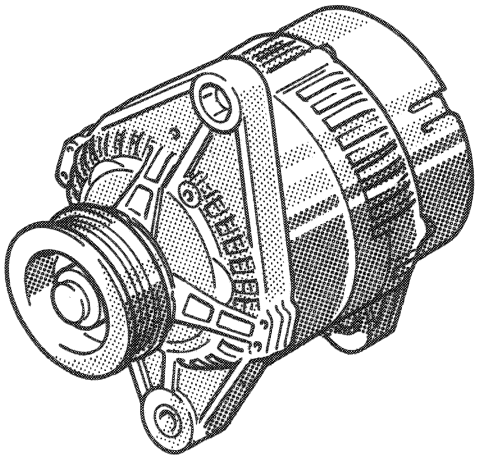

P3M424N01

139. ALTERNATOR

Engines : ***1108 S.P.I. - 1242 S.P.I.***

Type :
M.MARELLI A 115I-14V-38/65A

Characteristics:

Nominal voltage at 20° C	14 V
Nominal current (1800/6000 rpm)	38/65 A
Continuous maximum speed	18000 rpm
Temporary maximum speed for 15 minutes	20000 rpm
Inductor winding resistance at 20° C	2,8 ± 5% Ω
Electronic voltage regulator	RTM 121 A
Moment of inertia for rotor	18,7 Kg.cm²

Engines : ***1372 Turbo***

Type :
BOSCH K1-14V-23/65A

Characteristics:

Nominal voltage at 20° C	14 V
Nominal current (1800/6000 rpm)	23/65 A
Inductor winding resistance at 20° C	2,61 ÷ 3,19 Ω
Electronic voltage regulator	BOSCH EL-14V-4C

Engines : ***1697 Tds***

Type :
M.MARELLI A 115I-14V-38/65A

Characteristics:

Nominal voltage at 20° C	14 V
Nominal current (1800/6000 rpm)	38/65 A
Continuous maximum speed	18000 rpm
Temporary maximum speed for 15 minutes	20000 rpm
Inductor winding resistance at 20° C	2,8 ± 5% Ω
Electronic voltage regulator	RTM 121 A
Moment of inertia for rotor	18,7 Kg.cm²

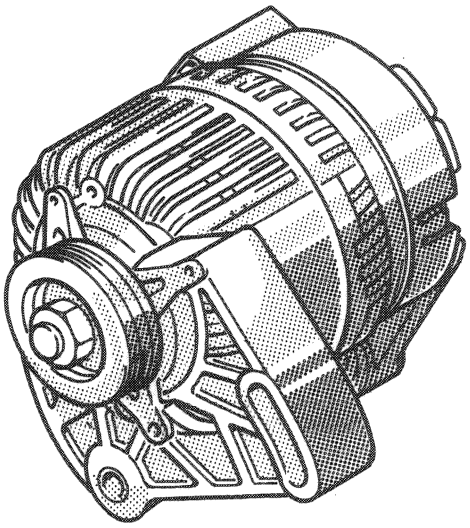

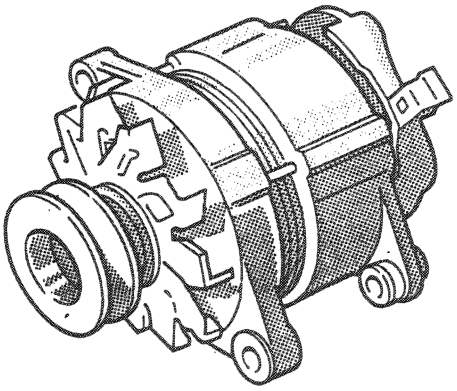

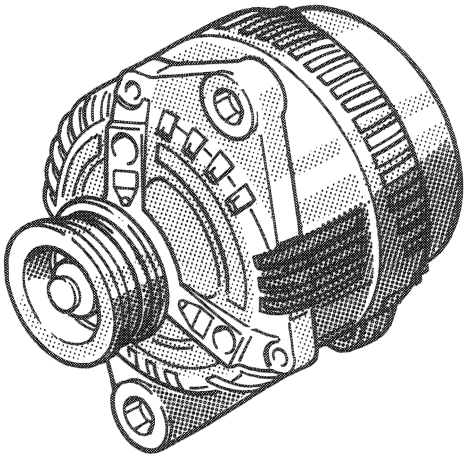

P3M425N01

139. ALTERNATOR

Engines : ***1108 S.P.I. - 1242 S.P.I. (With air conditioning)***

Type :

M.MARELLI A 115I-14V-40/75A

Characteristics:

Nominal voltage at 20° C	14 V
Nominal current (1800/6000 rpm)	40/75 A
Continuous maximum speed	18000 rpm
Temporary maximum speed for 15 minutes	20000 rpm
Inductor winding resistance at 20° C	2,8 ± 0,5% Ω
Electronic voltage regulator	RTM 121 A
Moment of inertia for rotor	18,7 Kg.cm²

Engines : ***1372 Turbo (With air conditioning)***

Type :

BOSCH K1-14V-34/90A

Characteristics:

Nominal voltage at 20° C	14 V
Nominal current (1800/6000 rpm)	34/90 A
Inductor winding resistance at 20° C	2,45 ÷ 2,75 Ω
Electronic voltage regulator	BOSCH EL-14V-4C

Engines : ***1697 Tds (With air conditioning)***

Type :

M.MARELLI A 127I-14V-50/85A

Characteristics:

Nominal voltage at 20° C	14 V
Nominal current (1800/6000 rpm)	50/85 A
Continuous maximum speed	18000 rpm
Temporary maximum speed for 15 minutes	20000 rpm
Inductor winding resistance at 20° C	2,6 ± 5% Ω
Electronic voltage regulator	24 TR/A
Moment of inertia for rotor	25,3 Kg.cm²

55D.

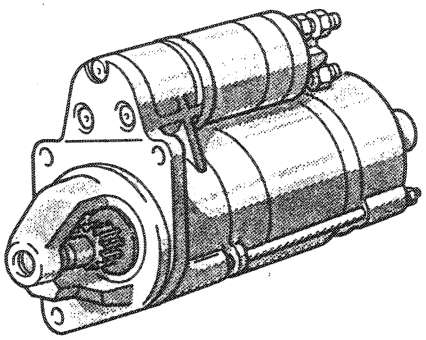

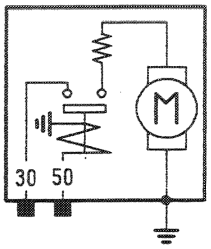

P3M426N01

Internal diagram

140. STARTER MOTOR

Engines : ***1108 S.P.I. - 1242 S.P.I. - 1242 M.P.I.***

Type :

M.MARELLI E80 E-0,8/12

Characteristics:

Voltage	12 V
Nominal power	0,8 Kw
Number of poles	4
Operating tests at 20°C :	
Current	160 ÷ 180 A
Voltage	9,4 ÷ 9,6 V
Engagement tests at 20°C :	
Current	316 A
Voltage	7,3 V
Free running tests at 20°C :	
Current	47 ÷ 48 A
Voltage	11,2 ÷ 11,5 V
Relay resistance :	
Pull in winding	0,34 Ω
Hold in winding	1,22 Ω

Engine : ***1372 Turbo***

Type :

M.MARELLI E80-1/12

Characteristics:

Voltage	12 V
Nominal power	1 Kw
Number of poles	4
Operating tests at 20°C :	
Current	200 A
Voltage	9,8 ÷ 10 V
Engagement tests at ambient T° of 20° C :	
Current	440 A
Voltage	7,6 V
Free running tests at 20°C :	
Current	49 ÷ 54 A
Voltage	11,4 ÷ 11,5 V
Relay resistance :	
Pull in winding	0,32 Ω
Hold in winding	1,09 Ω

3M426N

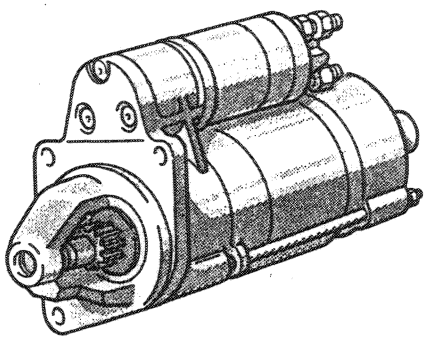

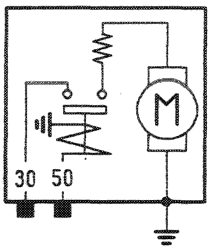

P3M426N01

Internal diagram

140. STARTER MOTOR

Engines : ***1697 Tds USA'87 - 1697 Tds EM 08***

Type :
BOSCH Dia 79,5-1,7/12

Characteristics:

Voltage	12 V
Nominal power	17 Kw
Number of poles	6
Operating tests at 20°C	
Current	480 A
Voltage	8,85 V
Engagement tests at 20°C	
Current	1000 ÷ 1050 A
Voltage	5,2 ÷ 5,4 V
Free running tests at 20°C	
Current	30 ÷ 40 A
Voltage	11,7 V
Relay resistance :	
Pull in winding	0,37 ÷ 0,40 Ω
Hold in winding	1,60 ÷ 1,80 Ω

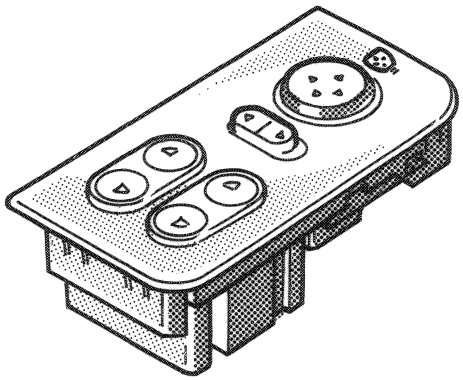

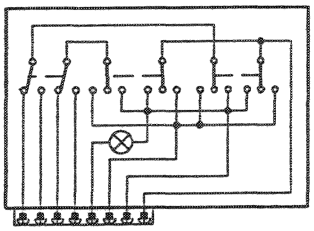

P3M427N01

Internal diagram

148. ELECTRICALLY ADJUSTABLE EXTERNAL REAR VIEW MIRRORS CONTROL PANEL

Characteristics:

Switch travel :	2,6 ÷ 9,5 mm
Activating load	4 ± 0,5 N

3M427N

55D.

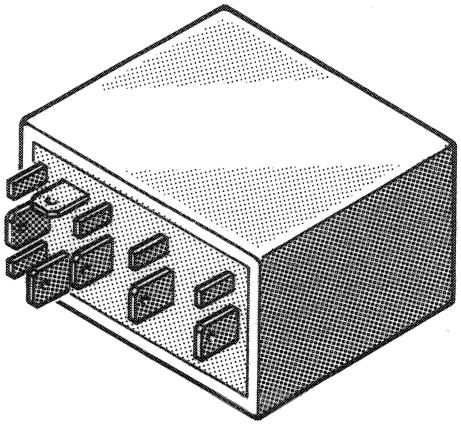

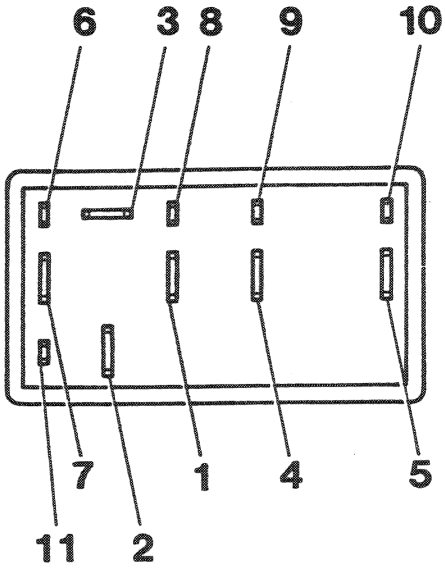

P3M428N01

155. ELECTRIC FRONT WINDOWS ELECTRONIC CONTROL UNIT

List of connecting pins:

Pin 1	Right dashboard earth
Pin 2	Battery direct positive (+30)
Pin 3	Device outlet
Pin 4	Electric front windows motor
Pin 5	Electric front windows motor
Pin 6	Right dashboard earth
Pin 7	Pos. cntrld by ignition (+15)
Pin 8	Doors inhibitor
Pin 9	Doors operation
Pin 10	Doors operation
Pin 11	Battery positive signal (+12)

Characteristics:

Voltage	12 V
Voltage operating range	10 ÷ 16 V
Temperature range	-30 ÷ +65° C
Current absorption with voltage of 13,5 V :	
rest position	0 A
operating	< 400 mA
Contact cleaning current :	15 mA
Storage temperature :	-30 ÷ +65° C
Operating temperature :	-40 ÷ +90° C

3M428N

157. CENTRAL LOCKING ELECTRONIC CONTROL UNIT

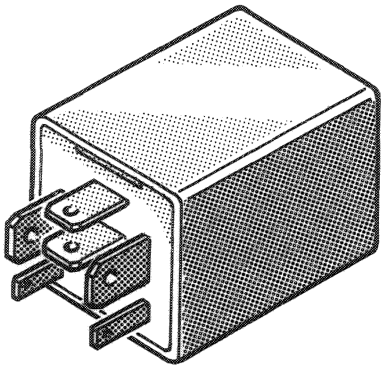

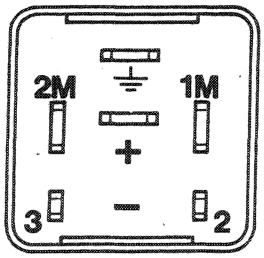

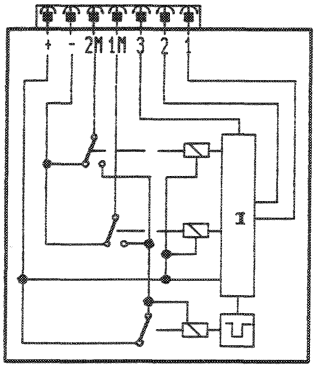

P3M429N01

Internal diagram

List of connecting pins:

Pin 2	Lock push button (Pin 2d)
Pin 3	Lock release push button (Pin 3d)
Pin 1M	Central locking mtr (Pin 1M)
Pin 2M	Central locking motor (Pin 1M)
Pin +	Battery direct positive (+30)
Pin -	Right dashboard earth

Characteristics:

Operating supply :	6 ÷ 18 V
Parametric supply :	10 ÷ 15 V
Absorption in stand-by with voltage of 12 V :	< 0,5 mA
Contact cleaning current :	10 mA
Operating time :	20 ÷ 40 s
Temperature range :	-30 ÷ +85° C
Operating temperature range :	-40 ÷ +90° C
Parametric temperature range :	-30 ÷ +85° C
Storage temperature range :	-40 ÷ +105° C
Input time :	50 ms
Switch resistance value :	
Series resistance	25 Ω
Parallel resistance	2 KΩ

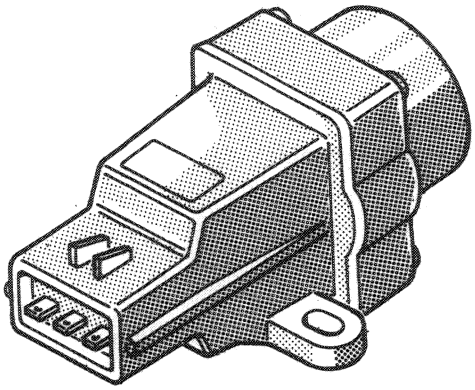

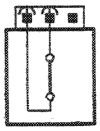

Internal diagram

P3M430N01

159. INERTIA SWITCH FOR SWITCHING OFF ELECTRIC FUEL PUMP

Characteristics:

Reaction to impact :

Operating above 12 g peak, 60 ms ± 10 ms duration

Not operating below 6g peak, 60 ms ± 10 ms duration

Operating temperature :

Maximum + 120° C

Minimum - 30° C

Initial contact resistance :

N.C. circuit 16 MΩ max

N.A. circuit 320 MΩ max

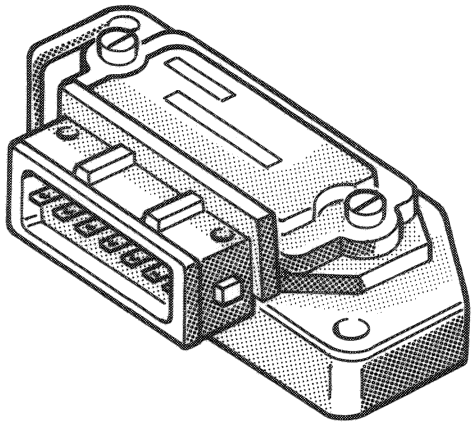

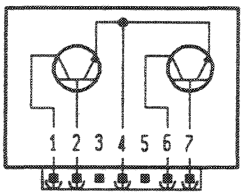

Internal diagram

P3M430N02

188. POWER MODULE

Engines : ***1372 Turbo***

Type :

BOSCH 0.227.100.201

List of connecting pins:

Pin 1	Ignition coils
Pin 2	Injection/Ignition control unit
Pin 3	Not connected - Spare
Pin 4	Earth on engine
Pin 5	Not connected - Spare
Pin 6	Ignition coils
Pin 7	Injection/Ignition control unit

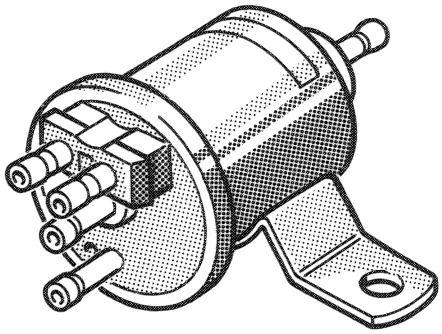

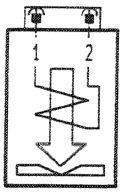

Internal diagram

P3M431N01

189. PIERBURG SOLENOID VALVE (WASTE-GATE)

Engines : ***1372 Turbo***

Type :

PIERBURG 7.21493.00

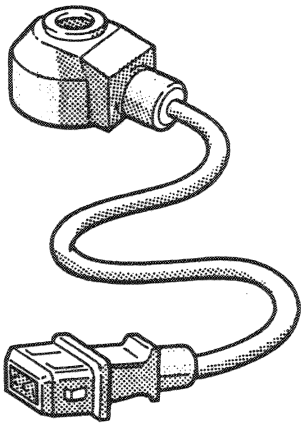

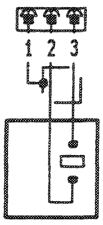

Internal diagram

P3M431N02

198. DETONATION SENSOR

Engines : ***1372 Turbo***

Type :

BOSCH 0.261.231.007

Characteristics:

Operating temperature :

-40 ÷ +130° C

Dynamometric tightening :

20 Nm ± 5 Nm

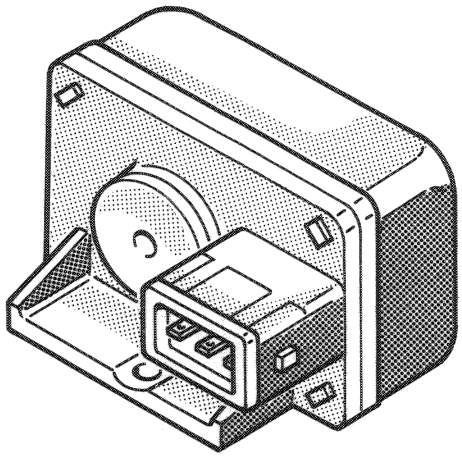

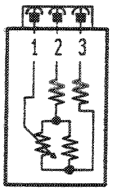

P3M432N01

Internal diagram

199. DISTANCE CORRECTER (BAROMETRIC CAPSULE)

Engines : ***1372 Turbo***

Type :

BOSCH 0.280.101.001

List of connecting pins:

Pin 1	Injection/Ignition control unit signal (Pin 46)
Pin 2	Injection/Ignition control unit negative (Pin 30)
Pin 3	Injection/Ignition control unit positive (Pin 12)

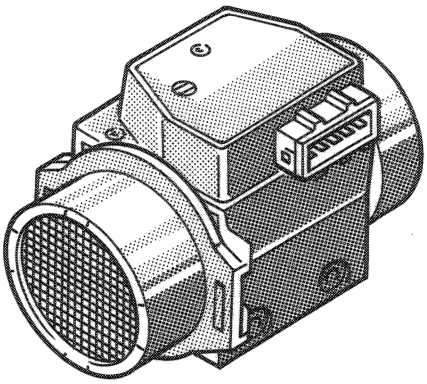

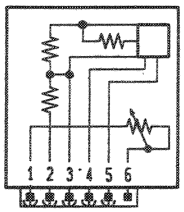

P3M432N02

Internal diagram

202. AIR FLOW METER

Engines : ***1372 Turbo***

Type :

BOSCH 0.280.212.019

List of connecting pins:

Pin 1	Earth signal
Pin 2	Injection/Ignition control unit (Pin 26)
Pin 3	Injection/Ignition control unit (Pin 7)
Pin 4	Injection/Ignition control unit (Pin 25)
Pin 5	Injection/Ignition control unit (Pin 37)
Pin 6	Not connected - Spare

Characteristics:

Maximum air flow rate : 470 Kg/h

3M432N

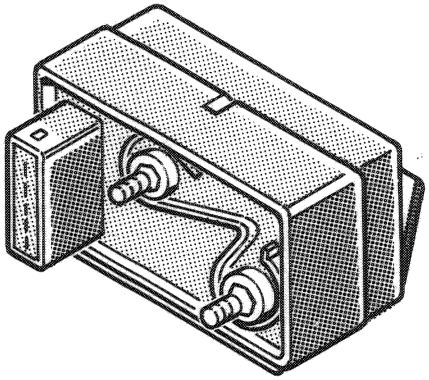

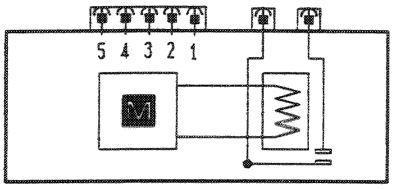

P3M433N01

Internal diagram

205. PRE-HEATING ELECTRONIC CONTROL UNIT

Engines : ***1697 Tds USA '87***
1697 Tds EM 08

Type :
SIPEA 2406

List of connecting pins:

Pin 1	Left front earth
Pin 2	Water temperature sensor
Pin 3	Pos cntrld by ignition (+15)
Pin 4	Ignition switch (+15)
Pin 5	Instrument panel (Heater plugs warning light)
Pin 6	Heater plugs
Pin 7	Battery direct positive (+30)

Characteristics:

Time (heater plugs supplied, warning light off)

10 sec

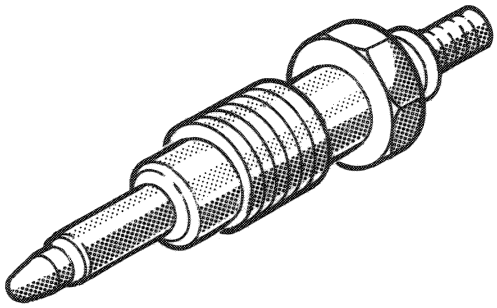

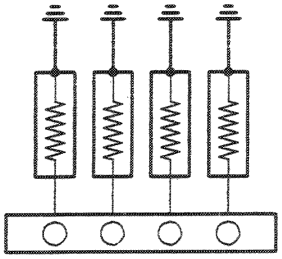

P3M433N02

Internal diagram

206. HEATER PLUGS

Engines : ***1697 Tds USA '87***
1697 Tds EM 08

Type :

BOSCH A.250.001.538

BERU 9.800.207.220-A

Tightening torque :

15 ± 0,5 Nm

3M433N

55D.

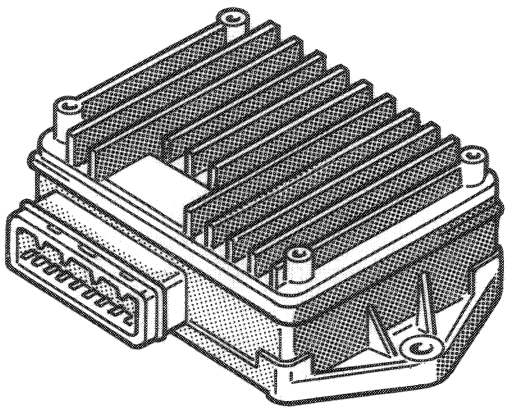

P3M434N01

226. ANTI-POLLUTION DEVICE (E.G.R.) ELECTRONIC CONTROL UNIT

Engines : ***1697 Tds USA '87***

Type :
M.MARELLI MCR 102A

List of connecting pins:

Pin 1	Rpm sensor
Pin 2	Rpm sensor
Pin 3	Diagnostic socket for anti-pollution device (E.G.R.)
Pin 4	Water temperature sensor (E.G.R.)
Pin 5	Potentiometer on injection pump
Pin 6	Potentiometer on injection pump
Pin 7	Pos. cntrld by ignition (+15)
Pin 8	Potentiometer on injection pump
Pin 9	Left front earth
Pin 10	Not connected - Spare
Pin 11	Solenoid valve for anti-pollution device (E.G.R.)

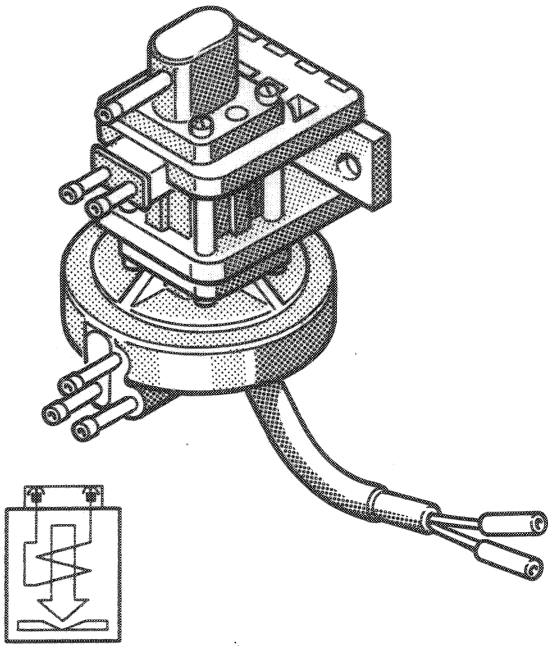

P3M434N02

Internal diagram

229. SOLENOID VALVE FOR E.G.R. DEVICE

Engines : ***1697 Tds USA '87***

Type :
BORG WAGNER Dis. X06377A000

3M434N

FIAT

Punto

Fiat Auto S.p.A.
AFTER-SALES MANAGEMENT
SERVIZI ASSISTENZIALI
SERVIZI TECNICI

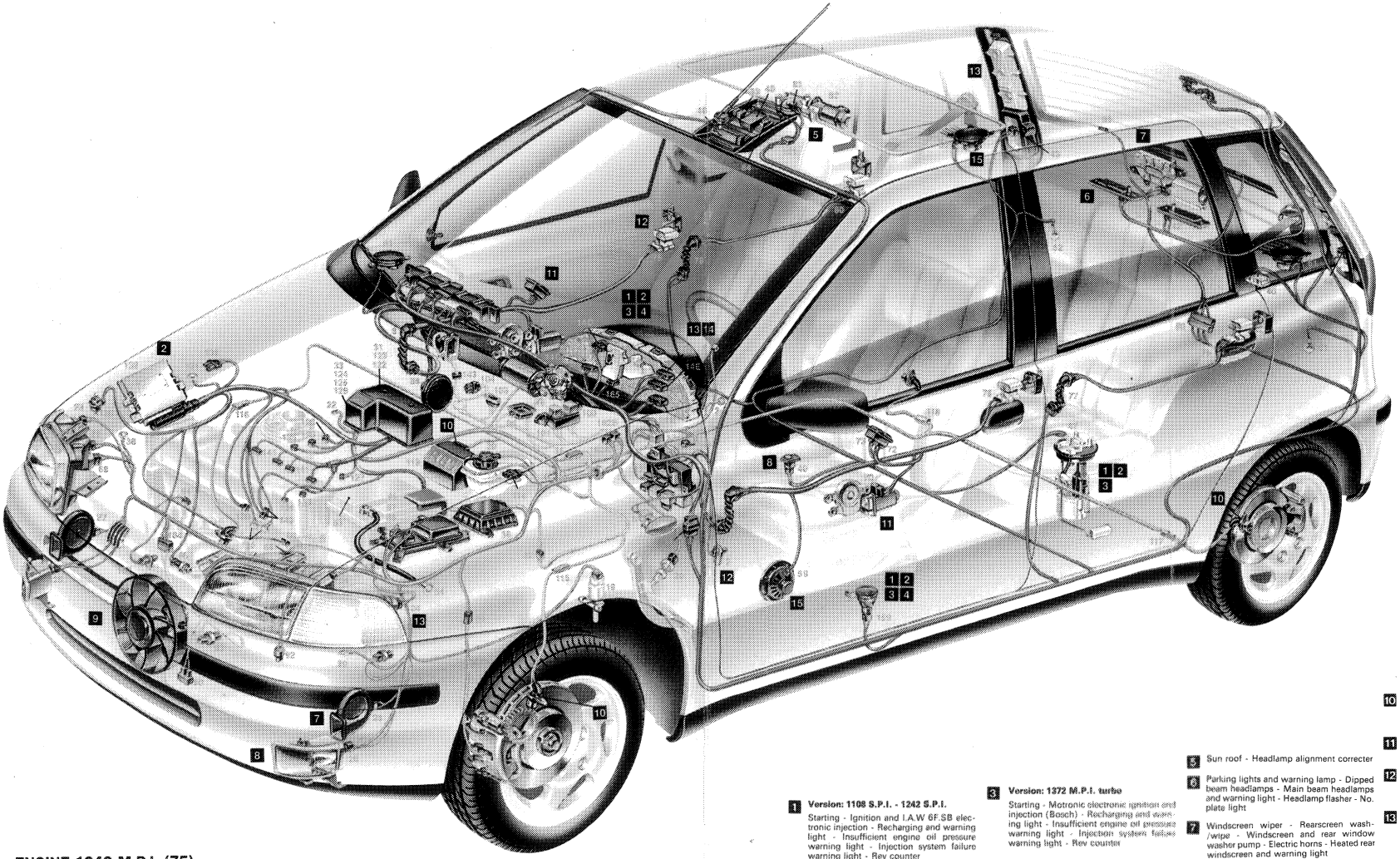

ENGINE 1242 M.P.I. (75)

1 Version: 1108 S.P.I. - 1242 S.P.I.
Starting - Ignition and I.A.W 6F.SB electronic injection - Recharging and warning light - Insufficient engine oil pressure warning light - Injection system failure warning light - Rev counter

2 Version: 1242 M.P.I.
Starting - Ignition and I.A.W 8F.5T electronic injection - Recharging and warning light - Insufficient engine oil pressure warning light - Injection system failure warning light - Rev counter

3 Version: 1372 M.P.I. turbo
Starting - Motronic electronic ignition and injection (Bosch) - Recharging and warning light - Insufficient engine oil pressure warning light - Injection system failure warning light - Rev counter

4 Version: 1697 TD
Starting - Plug preheating system and warning lamp - Recharging and warning light - Insufficient engine oil pressure warning light - Maximum turbocharging pressure warning light - Rev counter

5 Sun roof - Headlamp alignment correcter

6 Parking lights and warning lamp - Dipped beam headlamps - Main beam headlamps and warning light - Headlamp flasher - No. plate light

7 Windscreen wiper - Rearscreen wash-/wipe - Windscreen and rear window washer pump - Electric horns - Heated rear windscreen and warning light

8 Fog lights and warning light - Rear fog lamps and warning light - Handbrake applied

9 Engine cooling - Car interior ventilation - Water temperature gauge - Cigar lighter

10 Anti-lock brakes (A.B.S. 2SH) and failure warning light

11 Electric front windows

12 Central locking - Doors ajar warning light

13 Control system - Direction indicators and warning light - Hazard warning lights and warning light - Reversing lights - Braking lights and failure warning light (check)

14 AIR-BAG device and failure warning light

15 Wiring for radio - Courtesy light - Ideogram lights

Punto

Fiat Auto S.p.A.
AFTER-SALES MANAGEMENT
SERVIZI ASSISTENZIALI
SERVIZI TECNICI

DASHBOARD WIRING

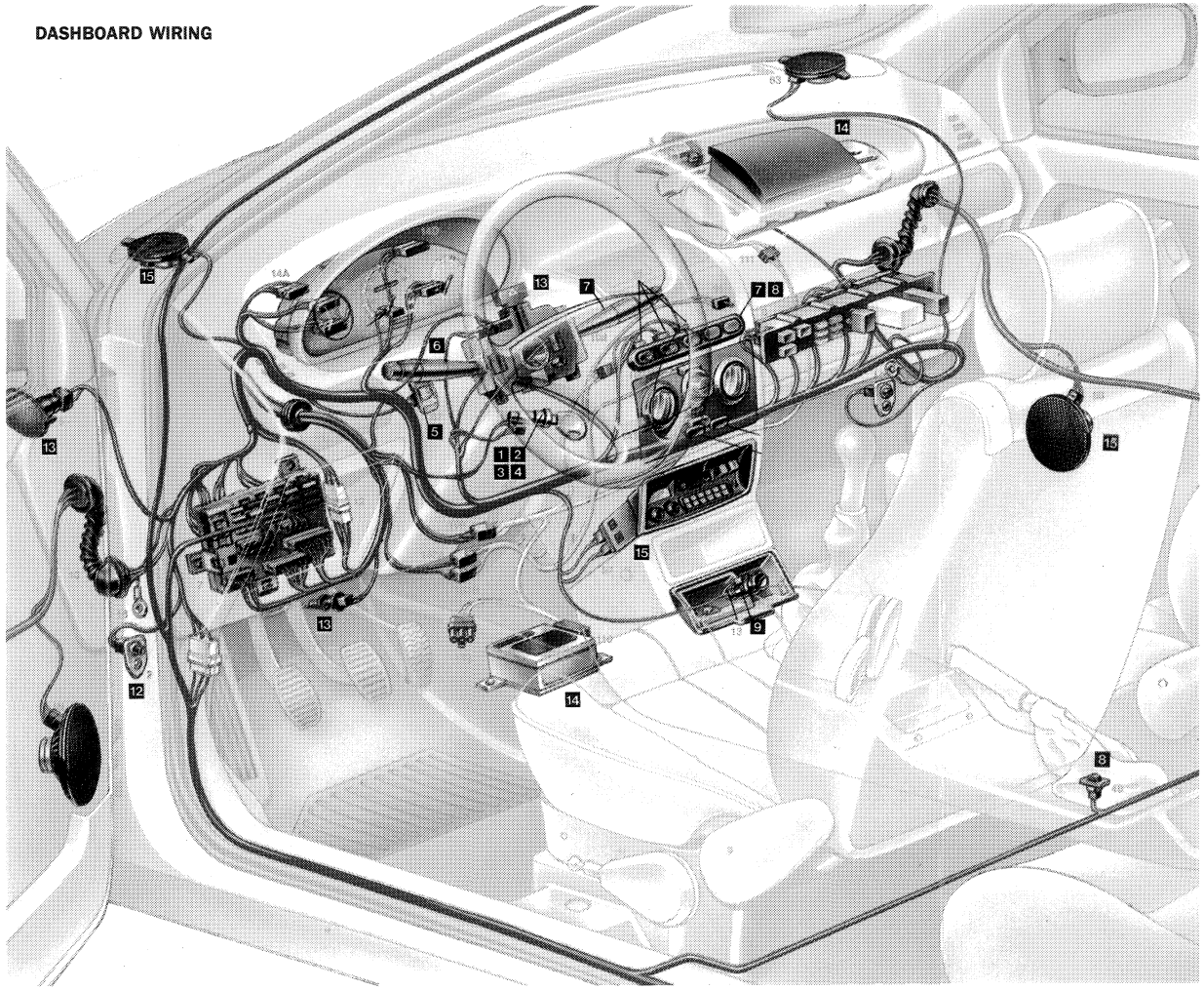

1 **Version: 1108 S.P.I. - 1242 S.P.I.**
Starting - Ignition and I.A.W 6F.SB electronic injection - Recharging and warning light - Insufficient engine oil pressure warning light - Injection system failure warning light - Rev counter

2 **Version: 1242 M.P.I.**
Starting - Ignition and I.A.W 8F.5T electronic injection - Recharging and warning light - Insufficient engine oil pressure warning light - Injection system failure warning light - Rev counter

3 **Version: 1372 M.P.I. turbo**
Starting - Motronic electronic ignition and injection (Bosch) - Recharging and warning light - Insufficient engine oil pressure warning light - Injection system failure warning light - Rev counter

4 **Version: 1697 TD**
Starting - Plug preheating system and warning lamp - Recharging and warning light - Insufficient engine oil pressure warning light - Maximum turbocharging pressure warning light - Rev counter

5 Sun roof - Headlamp alignment correcter

6 Parking lights and warning lamp - Dipped beam headlamps - Main beam headlamps and warning light - Headlamp flasher - No. plate light

7 Windscreen wiper - Rearscreen wash-/wipe - Windscreen and rear window washer pump - Electric horns - Heated rear windscreen and warning light

8 Fog lights and warning light - Rear fog lamps and warning light - Handbrake applied

9 Engine cooling - Car interior ventilation - Water temperature gauge - Cigar lighter

10 Anti-lock brakes (A.B.S. 2SH) and failure warning light

11 Electric front windows

12 Central locking - Doors ajar warning light

13 Control system - Direction indicators and warning light - Hazard warning lights and warning light - Reversing lights - Braking lights and failure warning light (check)

14 AIR-BAG device and failure warning light

15 Wiring for radio - Courtesy light - Idegram lights

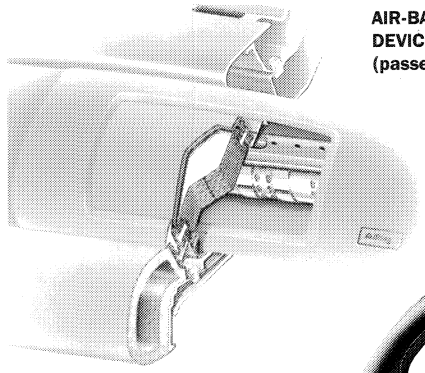

AIR-BAG DEVICE (passenger side)

AIR-BAG DEVICE (driver's side)

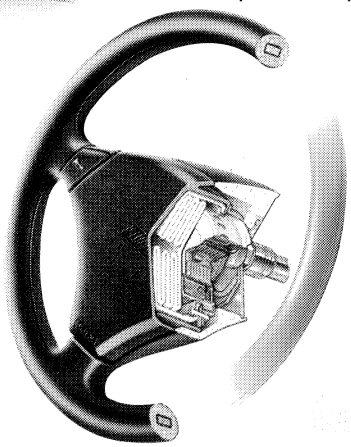

FUSE KEY

- 7,5A
- 10A
- 15A
- 20A
- 25A
- 30A

MAIN JUNCTION UNIT

(fuse side)

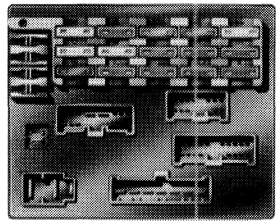

(relay side)

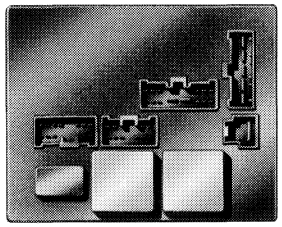

OPTIONAL EQUIPMENT JUNCTION UNIT